11B5000060

THREE-POLE CONTACTOR, IEC OPERATING CURRENT IE (AC3) = 520A, AC/DC COIL, 60VAC/DC



Product designation			Power contactor
Product type designation			B500
Contact characteristics			
Number of poles		Nr.	3
Rated insulation voltage Ui IEC/EN		V	1000
Rated impulse withstand voltage Uimp		kV	8
Operational frequency			
	min	Hz	25
	max	Hz	400
IEC Conventional free air thermal current Ith		A	700
Operational current Ie			
	AC-1 (≤40°C)	A	700
	AC-1 (≤55°C)	A	550
	AC-1 (≤70°C)	A	500
	AC-3 (≤440V ≤55°C)	A	520
	AC-4 (400V)	A	240
Rated operational power AC-3 (T≤55°C)			
	230V	kW	156
	400V	kW	290
	415V	kW	306
	440V	kW	328
	500V	kW	367
	690V	kW	416
	1000V	kW	312
Rated operational power AC-1 (T≤40°C)			
	230V	kW	252
	400V	kW	438
	500V	kW	575
	690V	kW	755
IEC max current Ie in DC1 with L/R ≤ 1ms with 1 poles in series			
	75V	A	650
	110V	A	320
	220V	A	--
	330V	A	--
	460V	A	--
IEC max current Ie in DC1 with L/R ≤ 1ms with 2 poles in series			
	75V	A	650
	110V	A	550
	220V	A	450
	330V	A	--
	460V	A	--
IEC max current Ie in DC1 with L/R ≤ 1ms with 3 poles in series			
	75V	A	650
	110V	A	600
	220V	A	600

The characteristics described in this document are subject to updates or modifications at any time. The descriptions, technical and functional information, illustrations and instructions in this brochure are purely illustrative, and are consequently not contractually binding

	330V	A	450
	460V	A	--
IEC max current Ie in DC1 with L/R ≤ 1ms with 4 poles in series			
	75V	A	650
	110V	A	600
	220V	A	600
	330V	A	600
	460V	A	450
IEC max current Ie in DC3-DC5 with L/R ≤ 15ms with 1 poles in series			
	75V	A	550
	110V	A	320
	220V	A	--
	330V	A	--
	460V	A	--
IEC max current Ie in DC3-DC5 with L/R ≤ 15ms with 2 poles in series			
	75V	A	550
	110V	A	550
	220V	A	450
	330V	A	--
	460V	A	--
IEC max current Ie in DC3-DC5 with L/R ≤ 15ms with 3 poles in series			
	75V	A	550
	110V	A	550
	220V	A	550
	330V	A	450
	460V	A	--
IEC max current Ie in DC3-DC5 with L/R ≤ 15ms with 4 poles in series			
	75V	A	550
	110V	A	550
	220V	A	550
	330V	A	450
	460V	A	450
Short-time allowable current for 10s (IEC/EN60947-1)		A	4050
Protection fuse			
	gG (IEC)	A	800
	aM (IEC)	A	500
Making capacity (RMS value)		A	5000
Breaking capacity at voltage			
	440V	A	5000
	500V	A	4500
	690V	A	4000
Resistance per pole (average value)		mΩ	0.14
Power dissipation per pole (average value)			
	Ith	W	68.6
	AC3	W	35
Tightening torque for terminals			
	min	Nm	35
	max	Nm	35
	min	lbin	25.8
	max	lbin	25.8
Tightening torque for coil terminal			
	min	Nm	1
	max	Nm	1

The characteristics described in this document are subject to updates or modifications at any time. The descriptions, technical and functional information, illustrations and instructions in this brochure are purely illustrative, and are consequently not contractually binding

		min	Ibin	0.74
		max	Ibin	0.74
Max number of wires simultaneously connectable			Nr.	2
Conductor section				
	AWG/Kcmil			
		max		2x 500 kcmil
Power terminal protection according to IEC/EN 60529				IP00
Mechanical features				
Operating position				
		normal		Vertical plan
		allowable		±30°
Fixing				Screw
Weight			g	1798
Conductor section				
	AWG/kcmil conductor section			
		max		2x 500 kcmil
Operations				
Mechanical life			cycles	5000000
Electrical life			cycles	700000
Safety related data				
Performance level B10d according to EN/ISO 13489-1				
		rated load	cycles	700000
		mechanical load	cycles	5000000
Mirror contats according to IEC/EN 609474-4-1				yes
EMC compatibility				yes
AC coil operating				
Rated AC voltage at 50/60Hz			V	60
AC operating voltage				
	of 50/60Hz coil powered at 50Hz			
	pick-up			
		min	%Us	80
		max	%Us	110
	drop-out			
		min	%Us	20
		max	%Us	60
	of 50/60Hz coil powered at 60Hz			
	pick-up			
		min	%Us	80
		max	%Us	110
	drop-out			
		min	%Us	20
		max	%Us	60
	of 60Hz coil powered at 60Hz			
	pick-up			
		min	%Us	80
		max	%Us	110
	drop-out			
		min	%Us	20
		max	%Us	60
AC average coil consumption at 20°C				
	of 50/60Hz coil powered at 50Hz			
		in-rush	VA	400
		holding	VA	18

The characteristics described in this document are subject to updates or modifications at any time. The descriptions, technical and functional information, illustrations and instructions in this brochure are purely illustrative, and are consequently not contractually binding

	of 50/60Hz coil powered at 60Hz				
			in-rush	VA	400
			holding	VA	18
Dissipation at holding ≤20°C 50Hz				W	18
DC coil operating					
DC rated control voltage				V	60
DC operating voltage					
	pick-up				
			min	%Us	80
			max	%Us	110
	drop-out				
			min	%Us	20
			max	%Us	60
Average coil consumption ≤20°C					
			in-rush	W	400
			holding	W	18
Max cycles frequency					
Mechanical operation				cycles/h	1200
Operating times					
Average time for Us control					
	in AC				
		Closing NO			
			min	ms	110
			max	ms	180
		Opening NO			
			min	ms	60
			max	ms	100
	in DC				
		Closing NO			
			min	ms	110
			max	ms	180
		Opening NO			
			min	ms	60
			max	ms	100
UL technical data					
General USE					
	Contactor				
			AC current	A	700
Short-circuit protection fuse, 600V					
	Standard fault				
			Short circuit current	kA	18
			Fuse rating	A	1200
			Fuse class		L
Ambient conditions					
Temperature					
	Operating temperature				
			min	°C	-50
			max	°C	70
	Storage temperature				
			min	°C	-60
			max	°C	80
Max altitude				m	3000
Resistance & Protection					
Pollution degree					3

The characteristics described in this document are subject to updates or modifications at any time. The descriptions, technical and functional information, illustrations and instructions in this brochure are purely illustrative, and are consequently not contractually binding

11B5000060

THREE-POLE CONTACTOR, IEC OPERATING CURRENT IE (AC3) = 520A, AC/DC COIL, 60VAC/DC

Dimensions

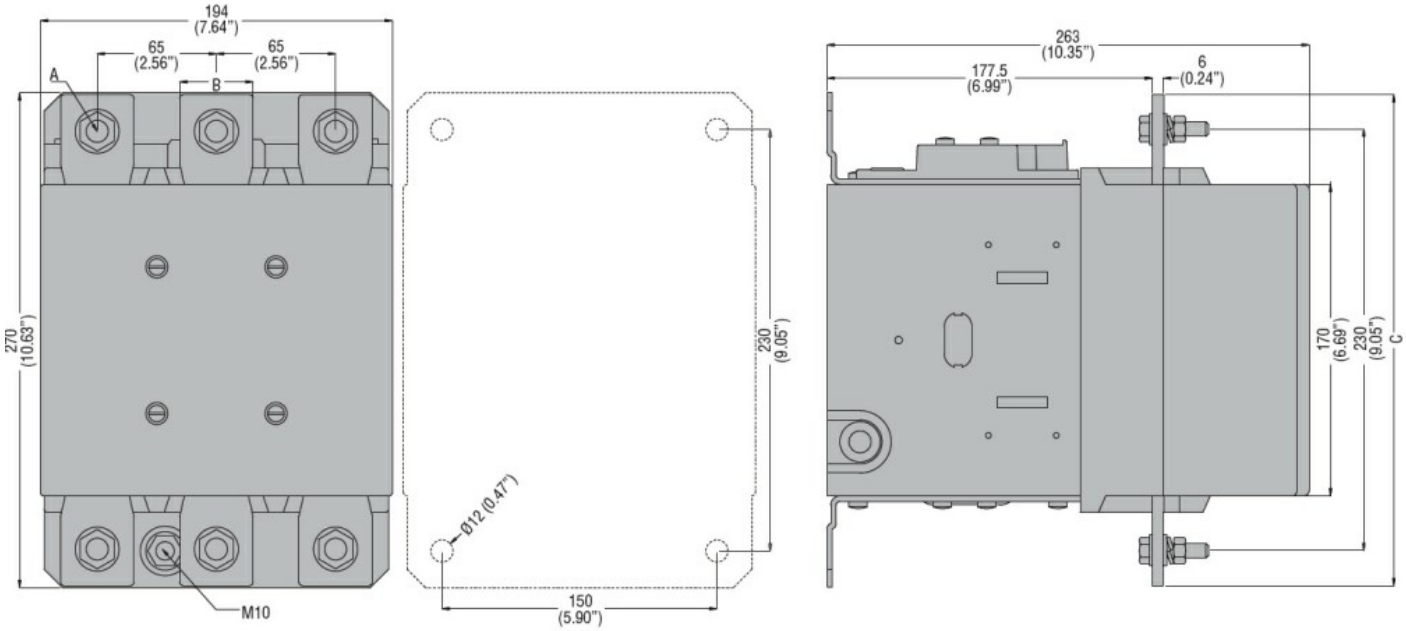

CONTACTOR TYPE	A	B	C
B500	M10	35 (1.38")	265 (10.43")
B630	M12	40 (1.57")	270 (10.63")

Wiring diagrams

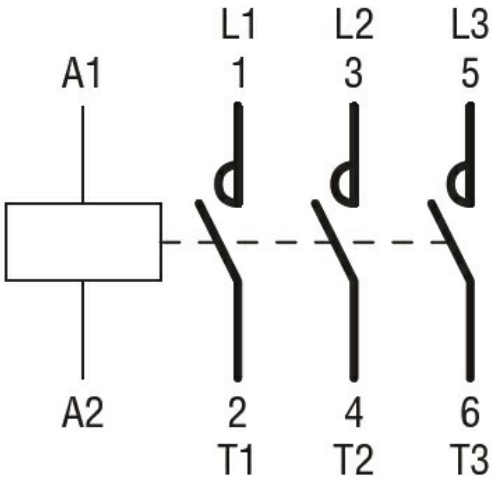

Certifications and compliance

Compliance

CSA C22.2 n° 60947-1
CSA C22.2 n° 60947-4-1
IEC/EN 60947-1
IEC/EN 60947-4-1
UL 60947-1
UL 60947-4-1

Certificates

CCC
cULus
EAC

ETIM classification

The characteristics described in this document are subject to updates or modifications at any time. The descriptions, technical and functional information, illustrations and instructions in this brochure are purely illustrative, and are consequently not contractually binding

ETIM 8.0

EC000066 - Power contactor, AC switching

The characteristics described in this document are subject to updates or modifications at any time. The descriptions, technical and functional information, illustrations and instructions in this brochure are purely illustrative, and are consequently not contractually binding