Model 5189
BNC (Male) To
Micrograbber Test Clips

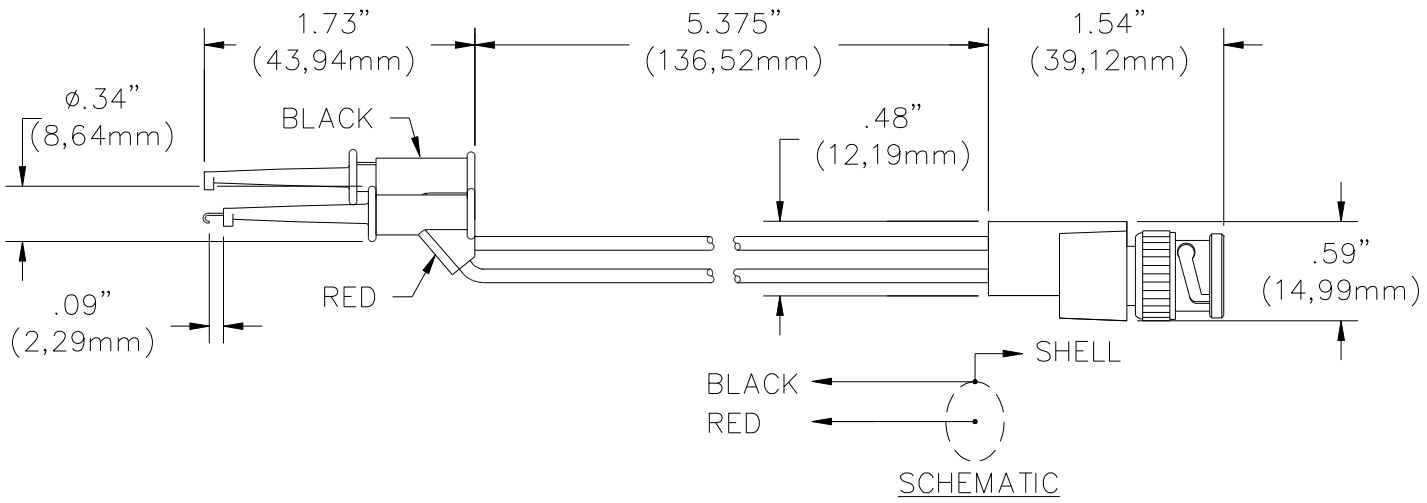

FEATURES:

- Breakout converts BNC (Female) cables/connectors to Micrograbber® Test Clips for test versatility.
- BNC connector and grabber cap are molded directly to the wire for pull strength durability and dust/moisture resistance.
- Grabber hook and BNC center contact are beryllium copper for superior strength.
- Grabber hook and BNC center contact are gold plated for optimum corrosion resistance and low contact resistance.

MATERIALS:

BNC: Body – Brass, Nickel Plated, Center Contact – Brass, Gold Plated.
Wire: 20 AWG, Stranding 41 x 36 T.C., PVC Insulated, .087" (2,21 mm) O.D.
Marking: Model 5189, Color matches Grabber.
Grabber: Contact – Beryllium Copper, Gold Plated
Spring – Stainless Steel
Insulation – Glass Filled Nylon. Color: one red, one black

RATING:

Voltage: Hand-held testing: 30VAC/60VDC Max.
Hands free testing in controlled voltage environments: 150 VRMS
Operating Temperature: +55°C (+131°F) Max.

ORDERING INFORMATION: Model 5189
Custom lengths are available, contact Pomona Technical support: 800-241-2060 (Technicalsupport@pomonatest.com)

All dimensions are in inches. Tolerances (except noted): .xx = ±.02" (,51 mm), .xxx = ± .005" (,127 mm).
All specifications are to the latest revisions. Specifications are subject to change without notice.
Registered trademarks are the property of their respective companies.