DATASHEET - ETR2-12



Timing relay, 0.05s-100h, 24-240VAC 50/60Hz, 24-48VDC, 1W, off-delayed

Part no.	**ETR2-12**
Catalog No.	**262686**
Alternate Catalog No.	**ETR2-12**
EL-Nummer (Norway)	**4133315**

Delivery program

Product range			ETR2 timing relays
Basic function			Timer relays
Function			Off-delayed
			Fixed timing function
Number of changeover contacts			1
Time range			0.05 s - 100 h
Time range			0.05 - 1 s 1.5 - 30 s 5 - 100 s 1.5 - 30 min 5 - 100 min 0.5 - 10 h 5 - 100 h
Rated operational current			
AC-15			
220 V 230 V 240 V	I_e	A	4
230 V (N/O)	I_e	A	3
230 V (NC)	I_e	A	3
Voltage range	U_{LN}	V	24 - 240 V AC, 50/60 Hz 24 - 48 V DC
Width		mm	17.5

Terminal marking according to EN 50042

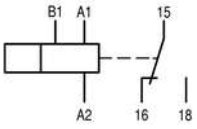

Technical data

Technical data in sheet catalogue

Other technical data (sheet catalogue)			Timing relays

Design verification as per IEC/EN 61439

Technical data for design verification			
Heat dissipation capacity	P_{diss}	W	0
Operating ambient temperature min.		°C	-25
Operating ambient temperature max.		°C	60
IEC/EN 61439 design verification			
10.2 Strength of materials and parts			
10.2.2 Corrosion resistance			Meets the product standard's requirements.
10.2.3.1 Verification of thermal stability of enclosures			Meets the product standard's requirements.
10.2.3.2 Verification of resistance of insulating materials to normal heat			Meets the product standard's requirements.
10.2.3.3 Verification of resistance of insulating materials to abnormal heat and fire due to internal electric effects			Meets the product standard's requirements.
10.2.4 Resistance to ultra-violet (UV) radiation			Meets the product standard's requirements.
10.2.5 Lifting			Does not apply, since the entire switchgear needs to be evaluated.
10.2.6 Mechanical impact			Does not apply, since the entire switchgear needs to be evaluated.
10.2.7 Inscriptions			Meets the product standard's requirements.

10.3 Degree of protection of ASSEMBLIES			Does not apply, since the entire switchgear needs to be evaluated.
10.4 Clearances and creepage distances			Meets the product standard's requirements.
10.5 Protection against electric shock			Does not apply, since the entire switchgear needs to be evaluated.
10.6 Incorporation of switching devices and components			Does not apply, since the entire switchgear needs to be evaluated.
10.7 Internal electrical circuits and connections			Is the panel builder's responsibility.
10.8 Connections for external conductors			Is the panel builder's responsibility.
10.9 Insulation properties			
10.9.2 Power-frequency electric strength			Is the panel builder's responsibility.
10.9.3 Impulse withstand voltage			Is the panel builder's responsibility.
10.9.4 Testing of enclosures made of insulating material			Is the panel builder's responsibility.
10.10 Temperature rise			The panel builder is responsible for the temperature rise calculation. Eaton will provide heat dissipation data for the devices.
10.11 Short-circuit rating			Is the panel builder's responsibility. The specifications for the switchgear must be observed.
10.12 Electromagnetic compatibility			Is the panel builder's responsibility. The specifications for the switchgear must be observed.
10.13 Mechanical function			The device meets the requirements, provided the information in the instruction leaflet (IL) is observed.

Technical data ETIM 7.0

Relays (EG000019) / Timer relay (EC001439)			
Electric engineering, automation, process control engineering / Low-voltage switch technology / Relay and socket / Timed relay (ecl@ss10.0.1-27-37-16-05 [AKF092013])			
Type of electric connection			Screw connection
Function delay-on energization			No
Function delay on de-energization			Yes
Function floating contact on energization			No
Function floating contact on de-energization			No
Function star-delta			No
Function pulse shaping			No
Function flashing, starting with pause, fixed time			No
Function flashing, starting with pulse, fixed time			No
Clock function, starting with pause, variable			No
Clock function, starting with pulse, variable			No
With plug-in socket			No
Remote operation possible			No
Suitable for remote control			No
Pluggable on auxiliary contact block			No
Rated control supply voltage Us at AC 50HZ		V	24 - 240
Rated control supply voltage Us at AC 60HZ		V	24 - 240
Rated control supply voltage Us at DC		V	24 - 240
Voltage type for actuating			AC/DC
Nominal current		A	3
Time range		s	0.05 - 360000
Number of outputs, undelayed, normally closed contact			0
Number of outputs, undelayed, normally open contact			0
Number of outputs, undelayed, change-over contact			0
Number of outputs, delayed, normally closed contact			0
Number of outputs, delayed, normally open contact			0
Number of outputs, delayed, change-over contact			1
Outputs, reversible delayed/undelayed			No
With semiconductor output			No
Suitable for DIN rail (top hat rail) mounting			Yes
Suitable for front mounting			No
Width		mm	18
Height		mm	70
Depth		mm	63

Approvals

Product Standards	IEC/EN 61812-1; IEC/EN 60947-5-1; UL 508; CSA-22.2 No. 14; CE marking
UL File No.	E29184
UL Category Control No.	NKCR, NKCR7
CSA File No.	UL report valid
CSA Class No.	3211-03
North America Certification	UL listed, certified by UL for use in Canada
Degree of Protection	IEC: IP20, UL/CSA Type: -

Characteristics

Flow diagram for timing functions

LED legend

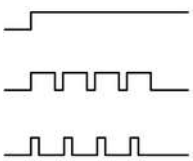

Time not running, contact 15 – 18 closed

Time running, contact 15 – 18 closed

Time running, contact 15 – 18 not closed

① A2/A1 linked
② A2/A1 not linked

12 Off-delayed

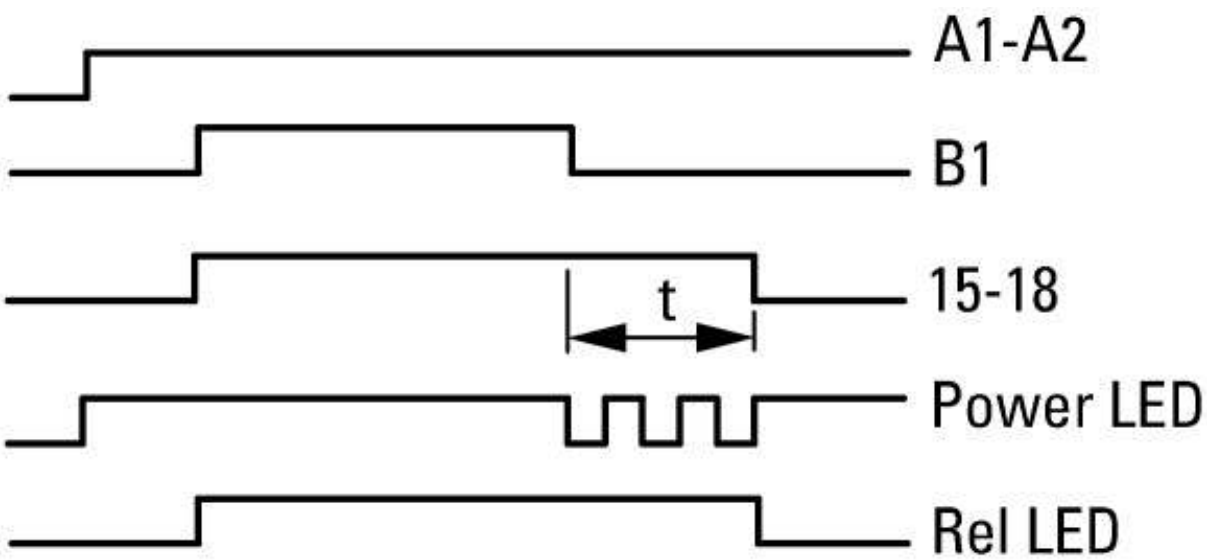

Dimensions

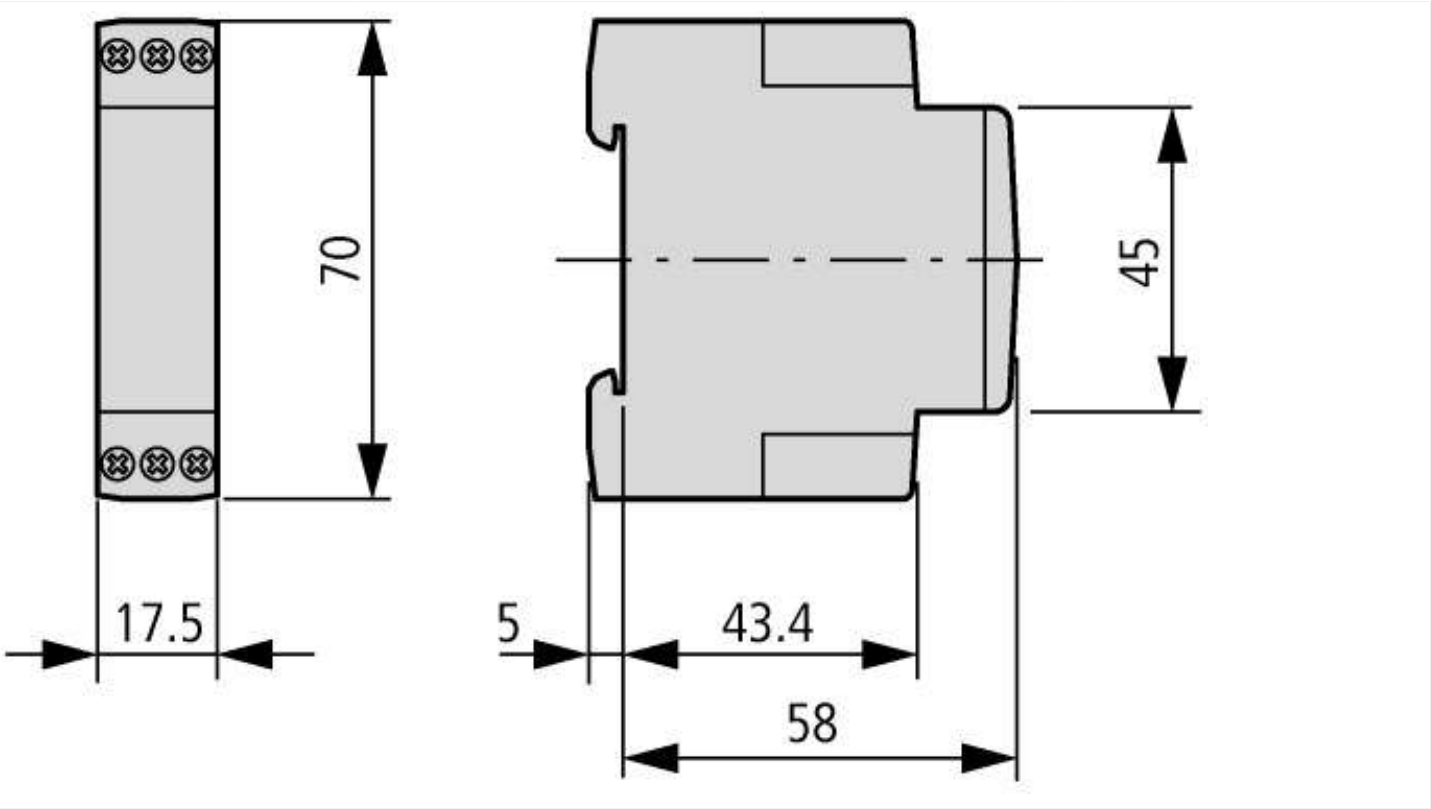

Additional product information (links)

Terminal marking	http://ecat.moeller.net/flip-cat/?edition=HPLEN&startpage=11.7
Timing functions	http://ecat.moeller.net/flip-cat/?edition=HPLEN&startpage=11.8
Load limit curves	http://ecat.moeller.net/flip-cat/?edition=HPLEN&startpage=11.10
Timing relays	http://ecat.moeller.net/flip-cat/?edition=HPLEN&startpage=11.13

© 05/2021 by Eaton Industries GmbH