E11651

Jumper cable with valve plug

AVDAA031PLS0005H03

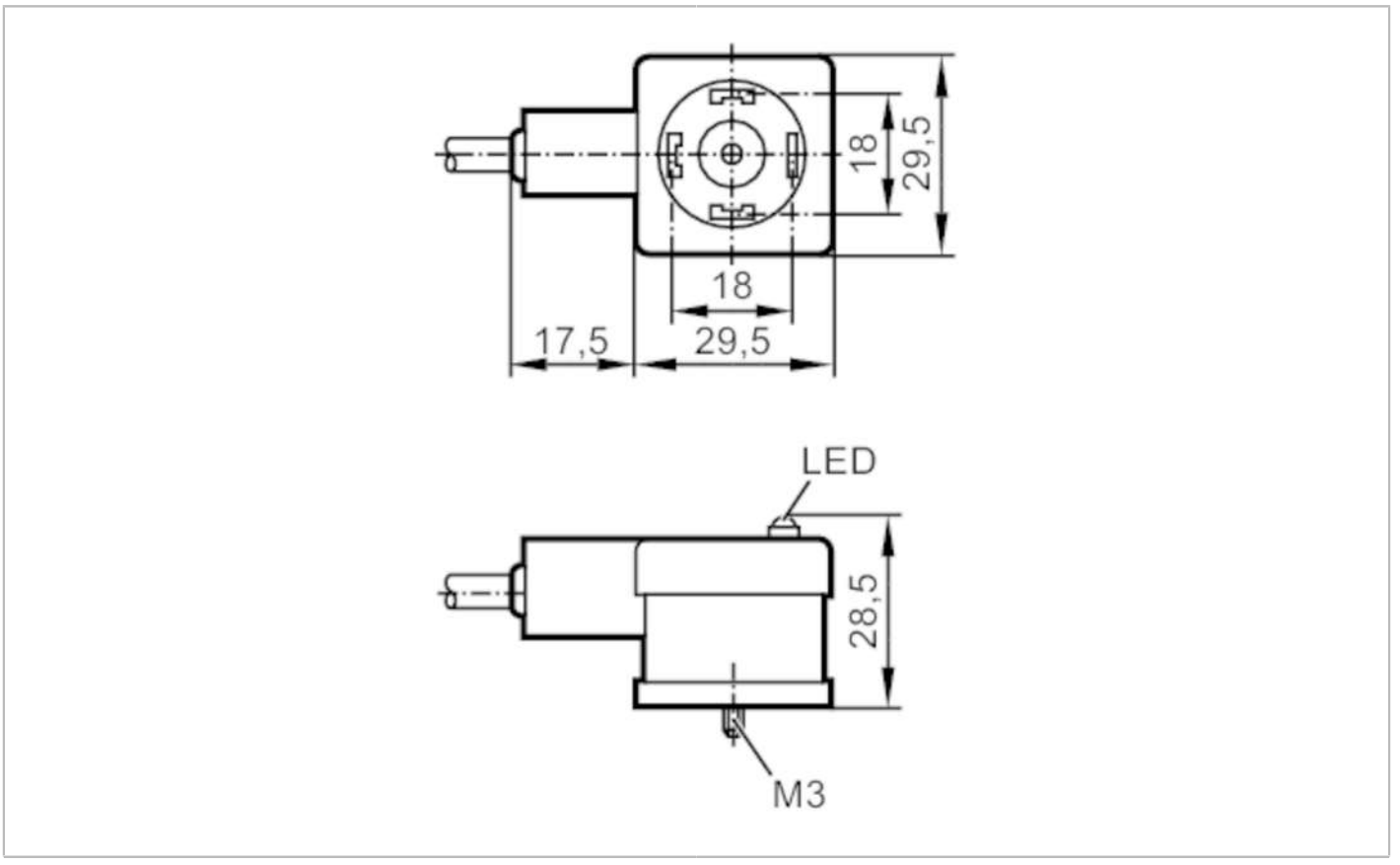

Application			
Special feature			Free from silicone
Free from silicone			yes
Electrical data			
Operating voltage	[V]		< 24 AC/DC
Overvoltage protection			yes; (VDR)
Max. current load total	[A]		5
Operating conditions			
Ambient temperature	[°C]		-20...80
Protection			IP 67
Mechanical data			
Weight	[g]		256.3
Dimensions	[mm]		28.5 x 29.5 x 47
Materials			PP; FKM
Moulded-body material			PP / FPM
Displays / operating elements			
Display		switching status	1 x LED, yellow
Remarks			
Pack quantity			1 pcs.

E11651

Jumper cable with valve plug

AVDAA031PLS0005H03

Electrical connection

Cable: 5 m, PUR, Ø 6.6 mm; 3 x 0.5 mm² / AWG 20

Electrical connection - socket

Connector: 1 x valve type A DIN, angled; Moulded body: PP / FPM



Connection

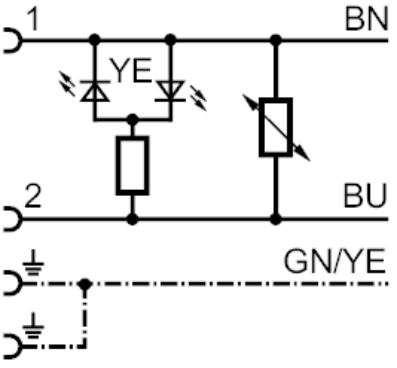

	Core colours :
BN =	brown
BU =	blue
GN/YE =	green/yellow