Product datasheet

Specifications



Photoelectric sensors XU, XUK, diffuse Sn 5 m 1out IOLINK or auto PNP/NPN, 1out 4.20 mA

XUK8TAE2MM12

Main

Range of product	Telemecanique Photoelectric sensors XU
Series name	Application assembly Application material handling
Electronic sensor type	Photo-electric sensor
Sensor name	XUK
Sensor design	Compact 50 x 50
Detection system	Diffuse with background suppression
Material	Plastic
Type of output signal	Analogue + discrete
Wiring technique	5-wire
Discrete output type	IOLINK PNP or NPN
Discrete output function	1 NO or 1 NC programmable
Analogue output range	4...20 mA
Electrical connection	1 male connector M12, 5 pins
Product specific application	Distance measurement on object
Emission	Red laser diffuse distance sensor class 1 conforming to IEC 60825-1
[Sn] nominal sensing distance	5 m diffuse distance sensor

Complementary

Enclosure material	ABS/PC
Lens material	PMMA
Maximum sensing distance	5 m diffuse distance sensor
Output type	Analog
Add on input	External teach
Status LED	1 LED (yellow) for output state 1 LED (green/yellow) for supply on/output state
[Us] rated supply voltage	24 V DC with reverse polarity protection
Supply voltage limits	18…30 V DC
Switching capacity in mA	<= 100 mA (overload and short-circuit protection)
Switching frequency	<= 500 Hz

Disclaimer: This documentation is not intended as a substitute for and is not to be used for determining suitability or reliability of these products for specific user applications

Maximum voltage drop	<2 V
Current consumption	<= 60 mA no-load
Maximum delay first up	300 ms
Maximum delay response	1.2 ms
Maximum delay recovery	1.2 ms
Setting-up	Using teach button or remote teaching
Depth	50 mm
Height	50 mm
Width	23 mm
Net weight	0.035 kg

Environment

Product certifications	Ecolab cULus CE
Ambient air temperature for operation	-20…50 °C, UL certified -40…60 °C
Ambient air temperature for storage	-40…80 °C
Vibration resistance	7 gn, amplitude = +/- 1.5 mm (f = 10…55 Hz) conforming to IEC 60068-2-6
Shock resistance	30 gn (duration = 11 ms) conforming to IEC 60068-2-27
IP degree of protection	IP67 conforming to IEC 60529 IP69K conforming to IEC 60529 IP69K conforming to DIN 40050

Packing Units

Unit Type of Package 1	PCE
Number of Units in Package 1	1
Package 1 Weight	59.0 g
Package 1 Height	3 cm
Package 1 width	6 cm
Package 1 Length	9 cm
Unit Type of Package 2	S01
Number of Units in Package 2	28
Package 2 Weight	1.844 kg
Package 2 Height	15 cm
Package 2 width	15 cm
Package 2 Length	40 cm

Offer Sustainability

REACh Regulation	REACh Declaration
EU RoHS Directive	Pro-active compliance (Product out of EU RoHS legal scope) EU RoHS Declaration
Mercury free	Yes
RoHS exemption information	Yes

Contractual warranty

Warranty	18 months

Product datasheet XUK8TAE2MM12

Dimensions Drawings

Dimensions

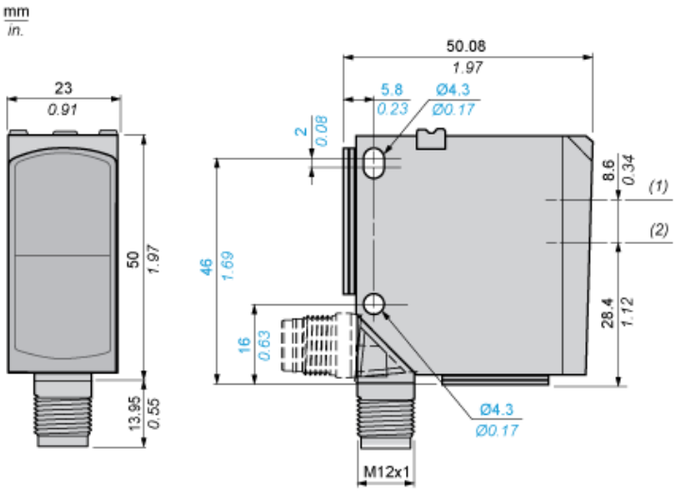

(1) Transmitter optical axis
(2) Receiver optical axis

Connections and Schema

Connector Wiring

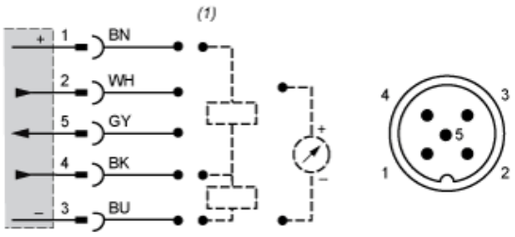

(1) Auto-detect
1 : + UB (BN: Brown)
2 : QA (WH: White)
3 : -UB (BU: Blue)
4 : Q (BK: Black)
5 : IN (GY: Grey)

Product datasheet XUK8TAE2MM12

Performance Curves

Curves

Size of light spot (typical)

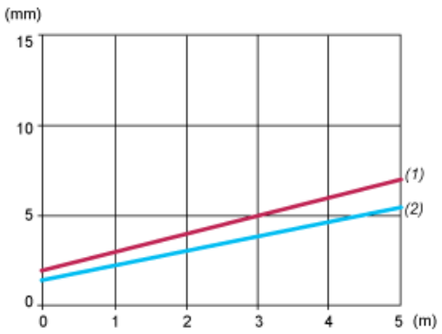

(1) Vertical (y)
(2) Horizontal (x)
0…15 mm : Size
0…5 m : Distance

Product datasheet XUK8TAE2MM12

Performance Curves

Curves

Output characteristic curve

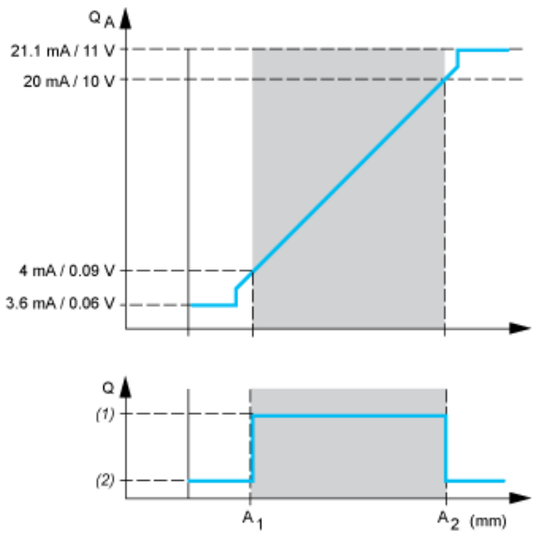

QA : Analogue output
Q : Switching output
(1) High
(2) Low

Mounting

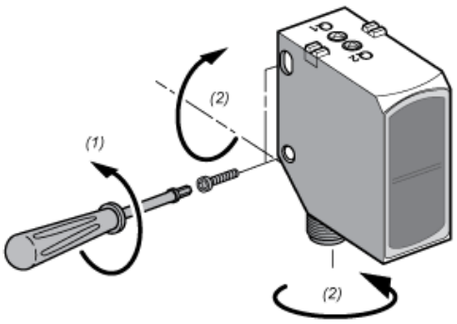

(1) < 1,5 Nm (13 lb-in)
(2) < 1 Nm (8.85 lb-in)