RoHS Compliant

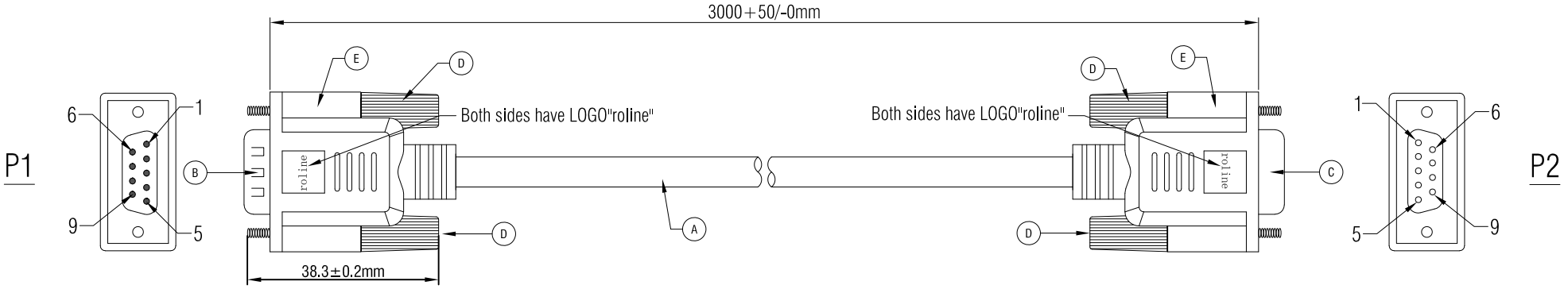

WIRE ADDRESS

P1	P2
1	1
2	2
3	3
4	4
5	5
6	6
7	7
8	8
9	9
Shell	Shell

Electrical Test:
1.100% TEST OPEN SHORT MIS-WIRE.
2.CONTACT RESISTANCE:3Ω MAX.
3.INSULATION RESISTANCE:5MΩ MIN.
4.HI-POT:300V DC/10MS.

NUMBER	PRODUCT SPECIFICATIONS	Quantity	Unit
E	45P PVC BEIGE		G
D	Screw:#4-40UNC 2.3*38.3mm(BEIGE MOLD NICKEL PLATED)	4	PCS
C	DB 9P FEMALE(Black Insulator,Nickel Plated,PIN Gold Plated)	1	PCS
B	DB 9P MALE(Black Insulator,Nickel Plated,PIN Gold Plated)	1	PCS
A	NON-UL 30AWG*9C+AE,OD=5.0mm,BEIGE PVC JACKET.	1	PCS

ROLINE RS232 Cable, DB9 M - F, 3 m

Item	11.01.6230	
Draw	Sam	Date: 2014.10.21
Approval		
Duty	F16	BOM.NO: 10124

SECOMP

Sample NO.	2016C42040A	Drawings of 1 (2)	Proportion: 1:1	Unit(mm)	A4