Brand of NTN corporation

Technical data

UCP311

Bearing units



Grey cast housing, radial insert ball bearing with socket set screws,seal with slinger

KIT CONTENT

UC.311.G2, P311

VISUAL (S)

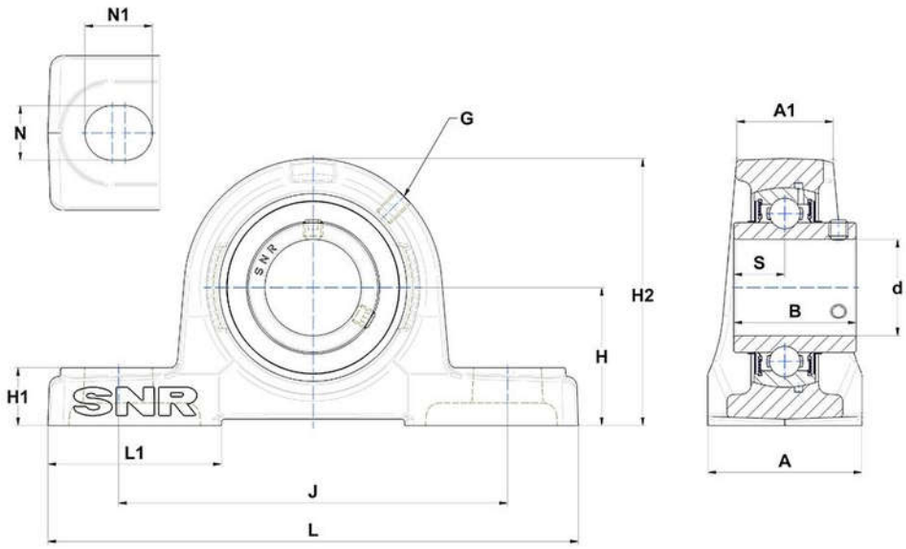

PRODUCT DEFINITION

Brand	SNR
A - Housing width	80 mm
A1 - Housing top width	51 mm
B - Width of Inner Ring	66 mm
d - Shaft diameter	55 mm
G - Grease fitting	M6x1

PRODUCT DEFINITION	
H - Distance mounting base to centerline spheric. seating diam.	80 mm
H1 - Housing foot height	30 mm
H2 - Housing height	154 mm
J - Mounting holes distance	236 mm
L - Housing length	310 mm
L1 - Housing foot length	85 mm
N - Mounting hole dimension	20 mm
N1 - Mounting hole length	38 mm
S - Distance front side/bearing centre	25 mm

PRODUCT PERFORMANCE	
C - Dynamic load rating	71600000 mN
C0 - Static load rating	44800000 mN
Operating temperature min.	253,15 °K
Operating temperature max.	373,15 °K

OTHER FEATURES	
Mass	7,77 kg
Recommended tightening torque for set screw	22 N-m