Brand of NTN corporation

Technical data

EXFE210

Bearing units



Grey cast housing, radial insert ball bearing with eccentric locking collar, seal with slinger

KIT CONTENT

EX.210.G2, FE210

VISUAL (S)

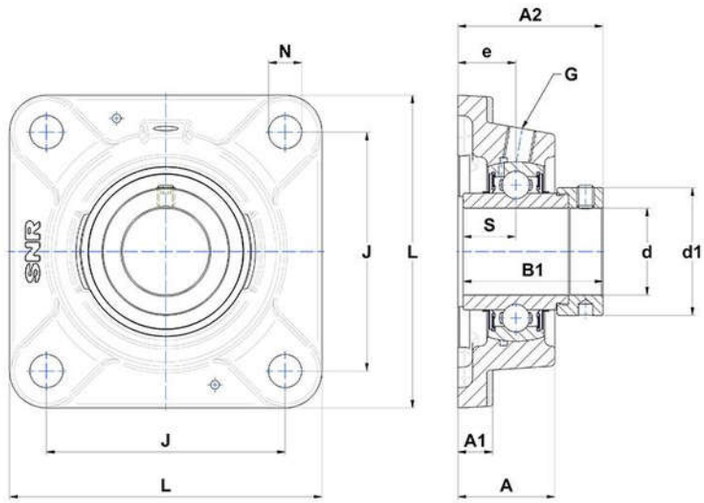

PRODUCT DEFINITION

Brand	SNR
A - Housing height	44 mm
A1 - Housing foot height / flange height	13 mm
A2 - Total height from mounting surface	66,1 mm
B - Width of Inner Ring	49,2 mm
B1 - Overall width Inner Ring	62,7 mm

PRODUCT DEFINITION	
d - Shaft diameter	50 mm
d1 - Outer dia of eccent. Lock. collar / nut of adapter sleeve	67,2 mm
e - Distance mounting surface to bearing center	28 mm
G - Grease fitting	R1/8"
J - Mounting holes distance	111 mm
L - Housing width / diameter	143 mm
N - Mounting hole dimension	18 mm
S - Distance front side/bearing centre	24,6 mm

PRODUCT PERFORMANCE	
C - Dynamic load rating	35100000 mN
C0 - Static load rating	23200000 mN
Operating temperature min.	253,15 °K
Operating temperature max.	373,15 °K

OTHER FEATURES	
Mass	2,76 kg
Recommended tightening torque for set screw	11.5 N-m