Compact Multiprotocol I/O Module for Ethernet
8 Universal Digital Channels, Configurable as PNP Inputs or 0.5 A Outputs
TBEN-S2-8DXP

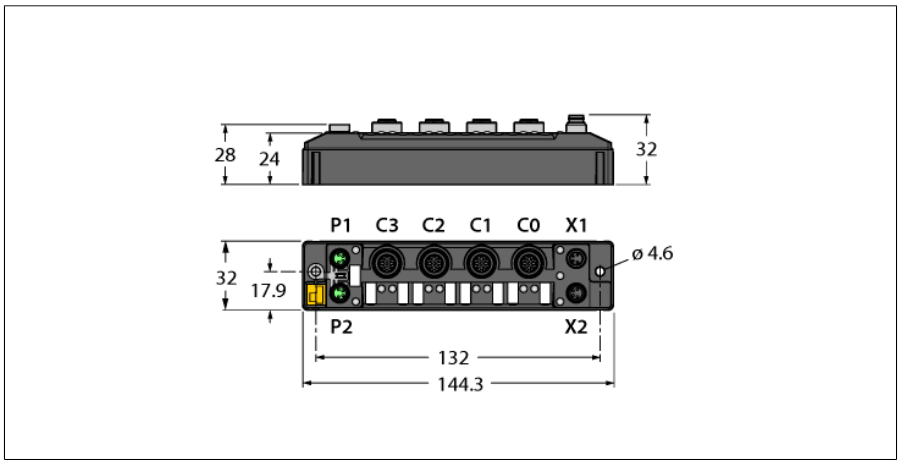

- **PROFINET device, EtherNet/IP device or Modbus TCP slave**
- **Integrated Ethernet switch**
- **Supports 10 Mbps / 100 Mbps**
- **2x M8, 4-pin, Ethernet fieldbus connection**
- **Glass fiber reinforced housing**
- **Shock and vibration tested**
- **Fully potted module electronics**
- **Protection classes IP65, IP67, IP69K**
- **M8, 4-pin connector for power supply**
- **Galvanically isolated voltage groups**
- **Diagnostics of the supply per I/O port**
- **Max. 0.5A per output**
- **Output diagnostics per channel**
- **Two freely selectable digital channels per port**
- **Pin1 switchable per I/O port**
- **FLC/ARGEE programmable**

Type designation	TBEN-S2-8DXP
Ident no.	6814076

Supply	
Supply voltage	24 VDC
Admissible range	18…30 VDC Total current max. 4 A per voltage group Total current V1 + V2 max. 5.5 A at 70 °C per module
Voltage supply connection	2 × M8, 4-pin
Operating current	V1: max. 150 mA
Sensor/Actuator supply V_{AUX1}	Ports C0-C1 powered by V1 Pin1 supply switchable for each port Short-circuit proof, 0.5 A per port
Sensor/Actuator supply V_{AUX2}	Ports C2-C3 powered by V2 Pin1 supply switchable for each port Short-circuit proof, 0.5 A per port
Electrical isolation	galvanic isolation of the voltage groups V1 and V2, voltages up to 500 VAC

System data	
Fieldbus transmission rate	10 Mbps/100 Mbps
Fieldbus connection technology	2 × M8, 4-pin
Protocol detection	automatic
Web server	default: 192.168.1.254
Service interface	Ethernet via P1 or P2

Field Logic Controller (FLC)	
ARGEE Firmware Version	3.0.1.0
ARGEE Engineering Version	2.0.25.0

Modbus TCP	
Addressing	Static IP, DHCP
Supported function codes	FC1, FC2, FC3, FC4, FC5, FC6, FC15, FC16, FC23
Number of TCP connections	8
Input register start address	0 (0x0000 hex)
Output register start address	2048 (0x0800 hex)

Ethernet/IP	
Addressing	acc. to EtherNet/IP specification
Quick Connect (QC)	< 500 ms
Device Level Ring (DLR)	supported
Class 3 connections (TCP)	3
Class 1 connections (CIP)	10
Input Assembly Instance	103
Output Assembly Instance	104
Configuration Assembly Instance	106

Edition • 2021-04-09T09:34:21+02:00

Compact Multiprotocol I/O Module for Ethernet
8 Universal Digital Channels, Configurable as PNP Inputs or 0.5 A Outputs
TBEN-S2-8DXP

PROFINET	
Addressing	DCP
Conformance class	B (RT)
MinCycleTime	1 ms
Fast Start-Up (FSU)	< 500 ms
Diagnostics	acc. to PROFINET alarm handling
Topology detection	supported
Automatic addressing	supported
Media Redundancy Protocol (MRP)	supported

Digital inputs	
Number of channels	8
Connectivity inputs	M12, 5-pin
Input type	PNP
Type of input diagnostics	Channel diagnostics
Switching threshold	EN 61131-2 Typ 3, PNP
Low level signal voltage	< 5 V
High level signal voltage	> 11 V
Low level signal current	< 1.5 mA
High level signal current	> 2 mA
Input delay	0.2 ms / 3 ms
Electrical isolation	Galvanically isolated to the fieldbus Voltage proof up 500 VDC

Digital outputs	
Number of channels	8
Connectivity outputs	M12, 5-pol
Output type	PNP
Type of output diagnostics	Channel diagnostics
Output voltage	24 VDC from potential group
Output current per channel	0.5 A, short-circuit proof
Load type	EN 60947-5-1: DC-13
Short-circuit protection	yes
Electrical isolation	Galvanically isolated to the fieldbus Voltage proof up 500 VDC

Standard/Directive conformity	
Vibration test	acceleration to 20 g acc. to EN 60068-2-6
Shock test	acc. to EN 60068-2-27
Drop and topple	acc. to EN 60068-2-31/IEC 60068-2-32
Electromagnetic compatibility	acc. to EN 61131-2
Approvals and certificates	CE, FCC, UV-resistant in accordance with DIN EN ISO 4892-2A (2013)
UL Certificate	cULus LISTED 21 W2, Encl.Type 1 IND.CONT.EQ.

General Information	
Dimensions (W x L x H)	32 x 144 x 32mm
Operating temperature	-40…+70 °C
Storage temperature	-40 °C … +85 °C
Altitude	max. 5000 m
Protection class	IP65 IP67 IP69K
MTTF	238 years acc. to SN 29500 (Ed. 99) 20 °C
Housing material	PA6-GF30
Housing color	Black
Material label	Polycarbonate
Halogen-free	yes
Mounting	2 mounting holes □ 4.6 mm

Edition • 2021-04-09T09:34:21+02:00

Compact Multiprotocol I/O Module for Ethernet
8 Universal Digital Channels, Configurable as PNP Inputs or 0.5 A Outputs
TBEN-S2-8DXP

A comprehensive list of accessories for the TBEN-S product family is available at:

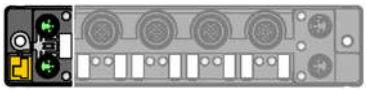

Note
It is strongly recommended to use only ready-made Ethernet cables!
Ethernet cable (example):
M8-M8:
ID number 6630376 PSG4M-0,2-PSG4M/TXN
ID number 6934033 PSGS4M-PSGS4M-4416-1M
M8-RJ45:
ID number 6935342 PSGS4M-RJ45S-4416-1M
M8-M12:
ID number 6935351 RSSD-PSGS4M-4416-2M

M8 x 1 Ethernet

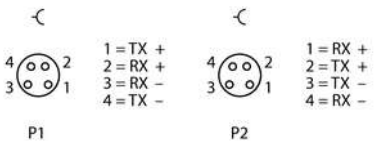



Note
V_{AUX} (Pin1) supply switchable for each port
Actuator and sensor cable/PUR connection cable (example):
RKC4.4T-2-RSC4.4T/TXL
Ident. no. 6625608
Connection cable with Y piece for single assignment
VBRS4.4-2RKC4T-1/1/TEL
Ident. no. 6628199

M12 x 1 Input

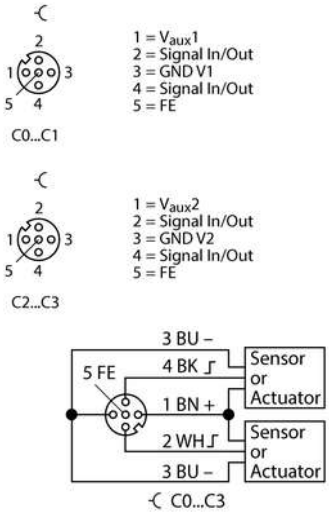

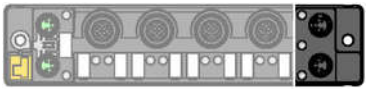

Note
Power supply cable (example):
M8-M8
ID number 6627044 PKG4M-0,2-PSG4M/TXL
ID number 6626679 PKG4M-4-PSG4M/TXL

M8 x 1 Voltage Supply

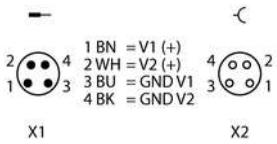

Edition • 2021-04-09T09:34:21+02:00

Module Status LED

LED	Color	Status	Description
ETH1 / ETH2	Green	ON	Ethernet link (100 Mbps)
		flashing	Ethernet communication (100 Mbps)
	Yellow	ON	Ethernet link (10 Mbps)
		flashing	Ethernet communication (10 Mbps)
		OFF	No Ethernet link
BUS	Green	ON	Active connection to a master
		Flashing	Steady flashing: Ready Sequence of 3 flashes in 2 seconds: FLC/ARGEE active
	Red	ON	IP address conflict or Restore Mode or Modbus timeout
		Flashing	Blink/Wink command active
	Red/ Green	Alternating	Waiting for assignment of an IP address, DHCP or BootP
		OFF	Power off
ERR	Green	On	Diagnostics disabled
	Red	ON	Diagnostics enabled V_2 undervoltage diagnosis is parameter-dependent
	LED response master in the Beep network:		
	Green	1 Hz, 250 ms off	Cyclical IO data exchange
	Green/Red	1 Hz, 250 ms red	Cyclical IO data exchange, diagnostics available
	Green/Red	1 Hz, alternating	Discovery mode active
	Red		Discovery mode active, diagnostics available
PWR	Green	ON	V_1 and V_2 power on
	Red	ON	V_2 power off or below defined tolerance of 18 V
		OFF	V_1 power off or below defined tolerance of 18 V

LED Status I/O

LED	Color	Status	Description
LED 0 … 7	Green	ON	Input or output active
	Red	ON	Output active with overload/short circuit
		Flashing	Power overload at the corresponding port. Both port LEDs are flashing.
		OFF	Input or output inactive
LED 7	White	Flashing	Blink/Wink command active

Edition • 2021-04-09T09:34:21+02:00

Compact Multiprotocol I/O Module for Ethernet
8 Universal Digital Channels, Configurable as PNP Inputs or 0.5 A Outputs
TBEN-S2-8DXP

Process Data Mapping of the Single Protocols

For more details on the corresponding protocols see manual.

Modbus TCP

Register Addressing (16-bit)

Offset Process Input Data: 0x0000, structure acc. to general register mapping

Offset Process Output Data: 0x0800: Structure acc. to general register mapping

Ethernet/IP

Word Addressing (16-bit)

Process Input Data (Station -> Scanner)

Status Word is located in front of the general process data!

	Reg/ Word		Bit 15	Bit 14	Bit 13	Bit 12	Bit 11	Bit 10	Bit 9	Bit 8	Bit 7	Bit 6	Bit 5	Bit 4	Bit3	Bit 2	Bit 1	Bit 0
GW status	0x0000		-	FCE	-	-	CFG	COM	V1	-	V2	-	-	-	-	-	-	Diag Warn
	0x0001 …		Structure acc. to general register mapping															

Process Output Data (Scanner -> Station)

Control-Word is located in front of the general process data!

	Reg/ Word		Bit 15	Bit 14	Bit 13	Bit 12	Bit 11	Bit 10	Bit 9	Bit 8	Bit 7	Bit 6	Bit 5	Bit 4	Bit3	Bit 2	Bit 1	Bit 0
Control	0x0000		Reserved															
	0x0001 …		Structure acc. to general register mapping															

PROFINET:

Byte addressing (8-bit)

Offset Process Input Data: 0x0000, structure acc. to general register mapping

Offset Process Output Data: 0x0000: Structure acc. to general register mapping

General register mapping:

Address details are relative, offset of the respective protocol is to be observed.

Channel assignment/port/pin:

Channel		-	-	-	-	-	-	-	-	Ch7	Ch6	Ch5	Ch4	Ch3	CH2	CH1	CH0
		-	-	-	-	-	-	-	-	DX7	DX6	DX5	DX4	DX3	DX2	DX1	DX0
Port		-	-	-	-	-	-	-	-	C3	C3	C2	C2	C1	C1	C0	C0
Pin										P2	P4	P2	P4	P2	P4	P2	P4

Process input data:

	Reg/ word		Bit 15	Bit 14	Bit 13	Bit 12	Bit 11	Bit 10	Bit 9	Bit 8	Bit 7	Bit 6	Bit 5	Bit 4	Bit3	Bit 2	Bit 1	Bit 0
		Byte	Bit 7	Bit 6	Bit 5	Bit 4	Bit 3	Bit 2	Bit 1	Bit 0	Bit 7	Bit 6	Bit 5	Bit 4	Bit3	Bit 2	Bit 1	Bit 0
			MSB								LSB							
Digital inputs	0x0000	0x0000	-	-	-	-	-	-	-	-	DX7	DX6	DX5	DX4	DX3	DX2	DX1	DX0
Diagnostics	0x0001	0x0002	ERR7	ERR6	ERR5	ERR4	ERR3	ERR2	ERR1	ERR0	-	-	-	-	VERR V2 P1C3	VERR V2 P1C2	VERR V1 P1C1	VERR V1 P1C0
Latch input	0x0002	0x0004	-	-	-	-	-	-	-	-	DX7	DX6	DX5	DX4	DX3	DX2	DX1	DX0
Counter Ch0	0x0003	0x0006	Counter value LSB															
	0x0004	0x0008	Counter value MSB															
Frequency Ch0	0x0005	0x000A	Frequency MSB								Frequency LSB							
Status	0x0006	0x000C	-	-	-	-	-	-	-	-	Status							
PWM diagnostics Ch3	0x0007	0x000E	-	-	-	-	-	-	-	-	-	-	-	-	-	-	-	PWM OUT ERR
PWM diagnostics Ch7	0x0008	0x0010	-	-	-	-	-	-	-	-	-	-	-	-	-	-	-	PWM OUT ERR
Module status	0x0009	0x0012	-	FCE	-	-	-	COM	V1	-	V2	-	-	-	-	-	-	DIAG

Process output data:

	Reg/ word		Bit 15	Bit 14	Bit 13	Bit 12	Bit 11	Bit 10	Bit 9	Bit 8	Bit 7	Bit 6	Bit 5	Bit 4	Bit3	Bit 2	Bit 1	Bit 0
		Byte	Bit 7	Bit 6	Bit 5	Bit 4	Bit 3	Bit 2	Bit 1	Bit 0	Bit 7	Bit 6	Bit 5	Bit 4	Bit3	Bit 2	Bit 1	Bit 0
			MSB								LSB							
Digital outputs	0x0000	0x0000									DX7	DX6	DX5	DX4	DX3	DX2	DX1	DX0

Latch reset	0x0001	0x0002	-	-	-	-	-	-	-	-	DX7	DX6	DX5	DX4	DX3	DX2	DX1	DX0
Control	0x0002	0x0004	-	-	-	-	-	-	-	-	-	-	-	-	-	-	-	CNT_RST
PWM Ch3	0x0003	0x0006	-	-	-	-	-	-	-	-	Duty cycle							
PWM Ch7	0x0004	0x0008	-	-	-	-	-	-	-	-	Duty cycle							
VAUX control	0x0005	0x000F	-	-	-	-	-	-	-	-	-	-	-	-	VAUX2P1C3	VAUX2P1C2	VAUX1P1C1	VAUX1P1C0

Legend:

V1	Undervoltage V1	CFG	I/O configuration error
V2	Undervoltage V2	FCE	I/O-ASSISTANT Force Mode active
Cx	Port x	Px	Pin x
DIx	Digital input channel x	DOx	Digital output channel x
Diag	Module diagnostics available	ERR x	Overcurrent output channel x
VERRVxCHyz	Overcurrent supply VAUXx channel y to z	PWMOUTERR	Overcurrent PWM output
VERRVxPyCz	Overcurrent supply VAUXx, pin y, port z	VAUXxPyCz	Supply VAUXx, pin y, port z
		CNT_RST	Counter reset

Edition • 2021-04-09T09:34:21+02:00