INSTRUCTION MANUAL
E2xB05 & E2xB10 Xenon Beacons
For use in Hazardous Locations

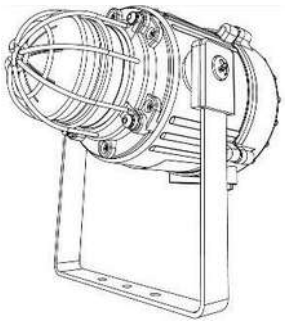

1) Warnings



- DO NOT OPEN WHEN AN EXPLOSIVE ATMOSPHERE IS PRESENT
- DO NOT OPEN WHEN ENERGISED
- POTENTIAL ELECTROSTATIC CHARGING HAZARD - CLEAN ONLY WITH A DAMP CLOTH
- HIGH VOLTAGE SHOCK HAZARD. WAIT 5 MINUTES AFTER REMOVING POWER BEFORE OPENING THE ENCLOSURE

Avertissement:

- NE PAS OUVRIR UN PRESENCE D'ATMOSPHERE EXPLOSIVE
- NE PAS OUVRIR ENERGIE
- DANGER POTENTIEL CHARGE ÉLECTROSTATIQUE - NETTOYER UNIQUEMENT AVEC UN CHIFFON HUMIDE
- HAUT TENSION, RISK DE CHOC. ATTENDEZ 5 MINUTES APRES AVOIR DEBRANCHE L'ALIMENTATION AVANT D'OUVRIR LA BOITIER

2) Rating & Marking Information

2.1 ATEX / IECEx certification

The E2xB05 and E2xB10 xenon beacons comply with the following standards:

EN60079-0:2012+A11:2013 / IEC60079-0: ed. 6.0 (2011-06)
EN60079-15:2010 / IEC60079-15: ed. 4.0 (2010-01)
EN60079-31:2014 / IEC60079-31:2013 ed. 2.0 (2013-11)

Certificate No. DEMKO 06ATEX 0421554X
IECEx ULD 14.0012X

The E2xB05 Xenon Beacon is rated as follows:



II 3G Ex nA IIC T3 Gc Ta -20°C to +40°C
II 3G Ex nA IIC T2 Gc Ta -20°C to +55°C
II 3D Ex tc IIIC 85°C Dc Ta -20°C to +40°C
II 3D Ex tc IIIC 100°C Dc Ta -20°C to +55°C

The E2xB10 Xenon Beacon is rated as follows:



II 3G Ex nA IIC T2 Gc Ta -20°C to +55°C
II 3D Ex tc IIIC 105°C Dc Ta -20°C to +40°C
II 3D Ex tc IIIC 120°C Dc Ta -20°C to +55°C

CE Marking

CE **0518**

Zones, Gas / Dust Groups and Temperature Classification

When connected to an approved system the E2X alarm horn may be installed in:

Zone 2 explosive gas air mixture not likely to occur in normal operation, and if it does, it will only exist for a short time.

Zone 22 explosive dust air mixture not likely to occur in normal operation, and if it does, it will only exist for a short time.

May be used with gases in groups:

Group IIA	propane
Group IIB	ethylene
Group IIC	hydrogen / acetylene

Having a temperature classification (for Gas applications) of:

T1	450ºC
T2	300ºC
T3	200ºC
T4	135ºC

May be used with Dust types:

Group IIIA	combustible flyings
Group IIIB	non-conductive dust
Group IIIC	conductive dust

Maximum Surface Temperature for Dust Applications:

120ºC	
105ºC	(E2xB10 only up to 40ºC ambient)
100ºC	(E2xB05 only)
85ºC	(E2xB05 up to 40ºC ambient only)

Installation must be carried out in compliance with the latest issue of the following standards:

EN60079-14 / IEC60079-14: Explosive atmospheres - Electrical installations design, selection and erection
EN60079-10-1 / IEC60079-10-1: Explosive atmospheres - Classification of areas. Explosive gas atmospheres

EN60079-10-2 / IEC60079-10-2: Explosive atmospheres – Classification of areas. Explosive dust atmospheres

2.2 NEC Class / Zone ratings US

The E2xB05 and E2xB10 Xenon beacons comply with the following standards:

UL 60079-0-2013
UL 60079-15-2013
UL 60079-31-2015

The E2xB05 Xenon Beacon is rated as follows:

Class I Zone 2 AEx nA IIC T3 Gc Ta -20°C to +40°C
Class I Zone 2 AEx nA IIC T2 Gc Ta -20°C to +55°C
Zone 22 AEx tc IIIC 85°C Dc Ta -20°C to +40°C
Zone 22 AEx tc IIIC 100°C Dc Ta -20°C to +55°C

The E2xB10 Xenon Beacon is rated as follows:

Class I Zone 2 AEx nA IIC T2 Gc Ta -20°C to +55°C
Zone 22 AEx tc IIIC 105°C Dc Ta -20°C to +40°C
Zone 22 AEx tc IIIC 120°C Dc Ta -20°C to +55°C

Installation must be carried out in compliance with the National Electric Code.

2.3 CEC Class / Zone ratings Canada

The E2xS1 alarm horn complies with the following standards:

CAN/CSA C22.2 No. 60079-0:2015
CAN/CSA C22.2 No. 60079-15:2016
CAN/CSA C22.2 No. 60079-31:2015

The E2xB05 Xenon Beacon is rated as follows:

Class I Zone 2 Ex nA IIC T3 Gc Ta -20°C to +40°C
Class I Zone 2 Ex nA IIC T2 Gc Ta -20°C to +55°C
Zone 22 Ex tc IIIC 85°C Dc Ta -20°C to +40°C
Zone 22 Ex tc IIIC 100°C Dc Ta -20°C to +55°C

The E2xB10 Xenon Beacon is rated as follows:

Ex nA IIC T2 Gc Ta -20°C to +55°C
Ex nA IIC T2 Gc Ta -20°C to +55°C
Ex tc IIIC 105°C Dc Ta -20°C to +40°C

Installation must be carried out in compliance with the Canadian Electric Code

2.4 NEC & CEC Class / Division Ratings for US / Canada

The E2xS1 alarm horn complies with the following standards:

ANSI/ISA 12.12.01-2015
CSA C22.2 No. 213-16

The E2xB05 Xenon Beacon is rated as follows:

Class I, Div 2, ABCD T2D Ta -20°C to +55°C
Class I, Div 2, ABCD T3 Ta -20°C to +40°C
Class II, Div 2, FG T5 Ta -20°C to +55°C
Class II, Div 2, FG T6 Ta -20°C to +40°C
Class III, Div 1&2 Ta -20°C to +55°C

The E2xB10 Xenon Beacon is rated as follows:

Class I, Div 2,	ABCD	T2C Ta -20°C to +55°C
Class I, Div 2,	ABCD	T2D Ta -20°C to +40°C
Class II, Div 2,	FG	T5 Ta -20°C to +55°C
Class II, Div 2,	FG	T6 Ta -20°C to +40°C
Class III		Ta -20°C to +55°C

Installation must be carried out in compliance with the National Electric Code / Canadian Electric Code

2.5 Ingress Protection Ratings

The product is rated for ingress Protection as follows:

IP rating per EN60079-0: IP64
IP rating per EN60529: IP66
Type rating per UL50E / NEMA250: 4 / 4X / 13

To maintain the ingress protection rating, the two off cable entries must be fitted with suitably rated, certified cable entry and/or blanking devices during installation.

2.6 electrical Ratings

Model No.	Voltage	Current
E2xB05DC012	12Vdc	520mA
E2xB05DC024	24Vdc	275mA
E2xB05DC048	48Vdc	145mA
E2xB05AC115	115Vac	80mA
E2xB05AC230	230Vac	30mA
E2xB10DC024	24Vdc	560mA
E2xB10DC048	48Vdc	260mA
E2xB10AC115	115Vac	185mA
E2xB10AC230	230Vac	107mA

It is important that a suitable power supply is used to run the equipment. The power supply selected must have the necessary capacity to provide the input current to all the units.

The input current will vary according to the voltage input level. The current levels shown above are for the worst-case input voltage resulting in max. current.

3) Special Conditions of Use

When used for a Group III application, the surface of the enclosure may store electrostatic charge and become a source of ignition in applications with a low relative humidity <~30% relative humidity where the surface is relatively free of surface contamination such as dirt, dust, or oil.

Guidance on protection against the risk of ignition due to electrostatic discharge can be found in EN TR50404 and IEC TR60079-32.

End user shall adhere to the manufacturer's installation and instruction when performing housekeeping to avoid the potential for hazardous electrostatic charges during cleaning, by using a damp cloth.

To maintain the ingress protection rating and mode of protection, the cable entries must be fitted with suitably rated, certified cable entry and/or blanking devices during

installation. If conduit is used for installation, seal conduit within 18 inches from the enclosure.

The equipment incorporates metal parts isolated from earth, having capacitance values exceeding the limits permitted in the standards of certification. Mounting bracket – 10.33pF; Lens guard – 12.33pF.

4) Location and Mounting

The location of the beacon should be made with due regard to the area over which the warning signal must be visible. They should only be fixed to services that can carry the weight of the unit.

The E2x beacon should be secured to any flat surface using the three 7mm fixing holes on the stainless steel U shaped mounting bracket. See Figure 1. The required angle can be achieved by loosening the two large bracket screws in the side of the unit, which allow adjustment of the beacon in steps of 18°. On completion of the installation the two large bracket adjustment screws on the side of the unit must be fully tightened to ensure that the unit cannot move in service.

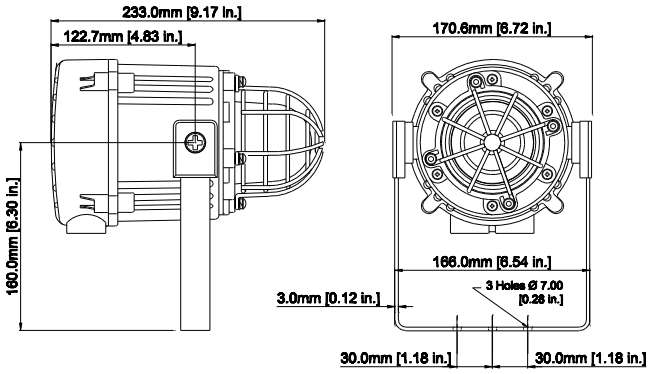

Fig. 1 Fixing Location for Beacon

5) Access to the Enclosure



Warning – High voltage may be present, risk of electric shock. DO NOT open when energised, disconnect power before opening.



Warning – Hot surfaces. External surfaces and internal components may be hot after operation, take care when handling the equipment.

To access the enclosure, remove the four M4 posi pan head screws, M4 spring and plain washers and withdraw the cover.

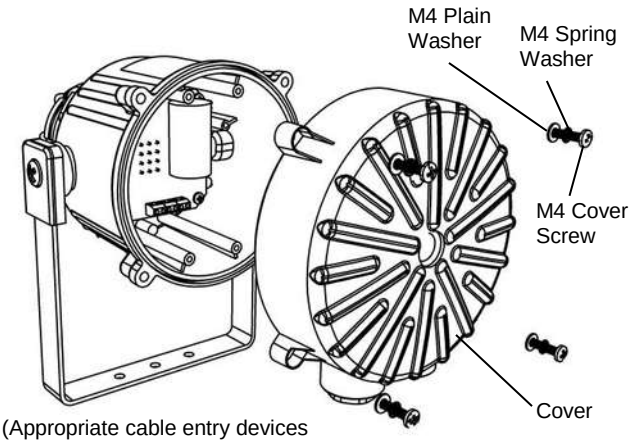

Fig. 2 Accessing the Enclosure.

To replace cover, check that the 'O' ring seal is in place. Carefully push the cover in place. Insert and tighten down M4 screws, spring and plain washers in the order shown above and tighten down.

6) Selection of Cable. Cable Glands, Blanking Elements & Adapters

When selecting the cable size, consideration must be given to the input current that each unit draws (see Table 1), the number of sounders on the line and the length of the cable runs. The cable size selected must have the necessary capacity to provide the input current to all of the sounders connected to the line.

The dual entries can be ordered with one of the following options:

2-off M20 x 1.5 thread
2-off ½" NPT thread
1-off M20 x 1.5 & 1-off ½" NPT thread

To maintain the ingress protection rating and mode of protection, the cable entries must be fitted with suitably rated, certified cable entry and/or blanking devices during installation. If conduit is used for installation, seal conduit within 18 inches from the enclosure.

For ambient temperatures over +40ºC the cable entry temperature may exceed +70ºC or the cable branching temperature may exceed +80ºC. Therefore suitable heat resisting cables and cable glands must be used as per table below

Ambient Temp.	40ºC	45ºC	50ºC	55ºC
Min. Rating of cables and cable glands	90ºC	95ºC	100ºC	105ºC

If a high IP (Ingress Protection) rating is required then a suitable sealing washer must be fitted under the cable glands or blanking plugs.

For use in explosive dust atmospheres, a minimum ingress protection rating of IP6X must be maintained.

For use in explosive gas atmospheres, a minimum ingress protection rating of IP54 must be maintained.

7) Cable Connections

Electrical connections are to be made into the terminal blocks on the PCBA located in the enclosure. See section 5 of this manual for access to the enclosure.

Wires having a cross sectional area between 0.5 mm² to 2.5mm² can be connected to each terminal way. If an input and output wire is required the 2-off Live/Neutral or +/- terminals can be used. If fitting 2-off wires to one terminal way the sum of the 2-off wires must be a maximum cross sectional area of 2.5mm². Strip wires to 8mm. Wires may also be fitted using ferrules. Terminal screws need to be tightened down with a tightening torque of 0.56 Nm / 5 Lb-in. When connecting wires to the terminals great care should be taken to dress the wires so that when the cover is inserted into the chamber the wires do not exert excess pressure on the terminal blocks. This is particularly important when using cables with large cross sectional areas such as 2.5mm².

8) AC Wiring

3-off 2-way terminal blocks are provided on the AC beacon for power. There are 2-off Live, 2-off Neutral and 2-off Earth terminals in total.

8.1 Wiring Diagrams

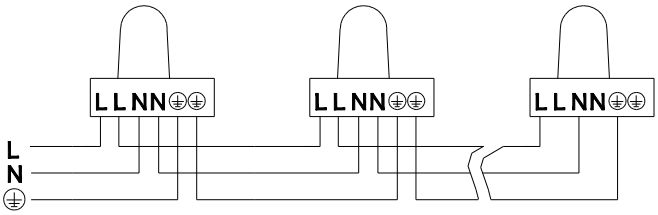

Fig 3. E2xB05/E2xB10 AC Simplified Block Diagram

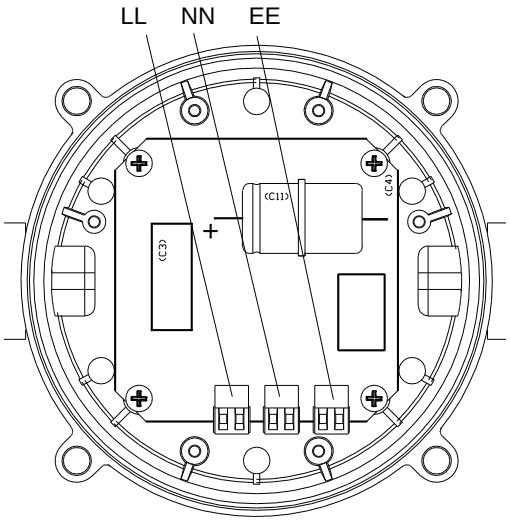

Fig. 4 E2xB05/E2xB10 AC Terminals

9) DC Wiring

3-off 2-way terminal blocks are provided on the AC beacon for power. There are 2-off +ve, 2-off -ve and 2-off Earth terminals in total.

9.1 Wiring Diagrams

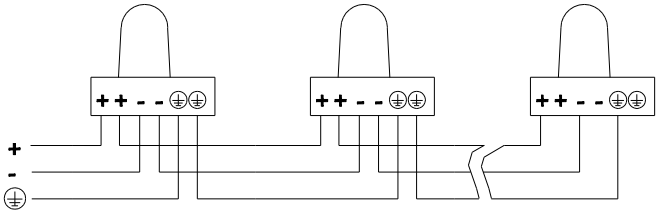

Fig. 5 E2xB05/E2xB10 DC Simplified Block Diagram

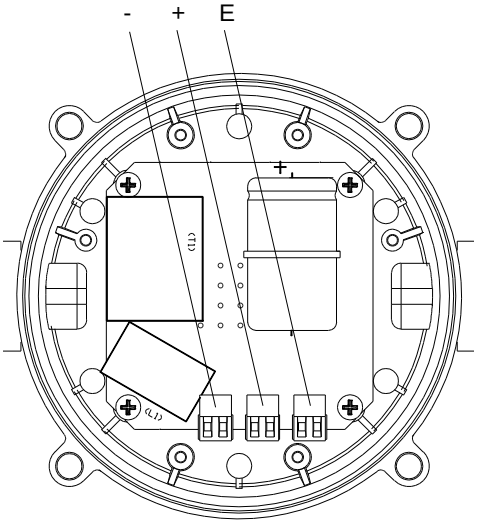

Fig. 6 E2xB05/E2xB10 DC Terminals

9.2 Line Monitoring

On E2xB05/E2xB10 DC units, DC reverse line monitoring can be used if required. All DC beacons have a blocking diode fitted in their supply input lines. An end of line monitoring resistor can be connected across the +ve and –ve terminals. If an end of line resistor is used it must have the following values:

24V DC Beacons

Minimum resistance 3K9 Ohms	Minimum Power 0.5W
Minimum resistance 1K Ohms	Minimum Power 2.0W

48V DC Beacons

Minimum resistance 15K Ohms	Minimum Power 0.5W
Minimum resistance 3K9 Ohms	Minimum Power 2.0W

The resistor must be connected directly across the +ve and -ve terminals as shown in the following drawing. Form the resistor legs as shown in Fig. 8a, remove the +ve and –ve terminal plugs and fit the resistor across the two terminal plugs before refitting them to the PCBA as shown in Fig. 8b.

A spacing of at least 1/16” (1.58mm) must be provided through air and over surfaces between uninsulated live parts.

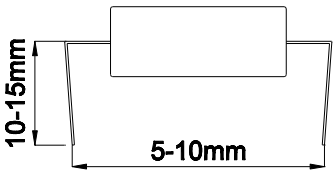

Fig. 8a End of Line Resistor Forming

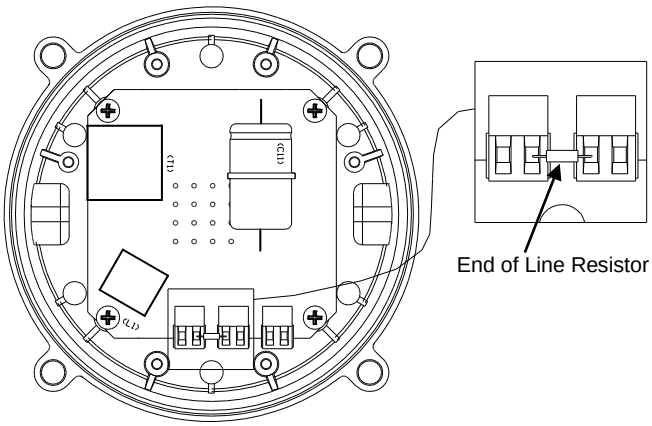

Fig. 8b End of Line Resistor Placement

10) Interchangeable & Spare Parts



Warning – Hot surfaces. External surfaces and internal components may be hot after operation, take care when handling the equipment.

The Beacon lens cover is interchangeable, contact E2S Ltd for a replacement lens cover available in various colours.

To change the lens cover, unscrew the 4-off M5 Cap screws, spring and flat washers using a 4mm Allen Key. Remove the wire guard and replace the old lens cover with the new lens cover.

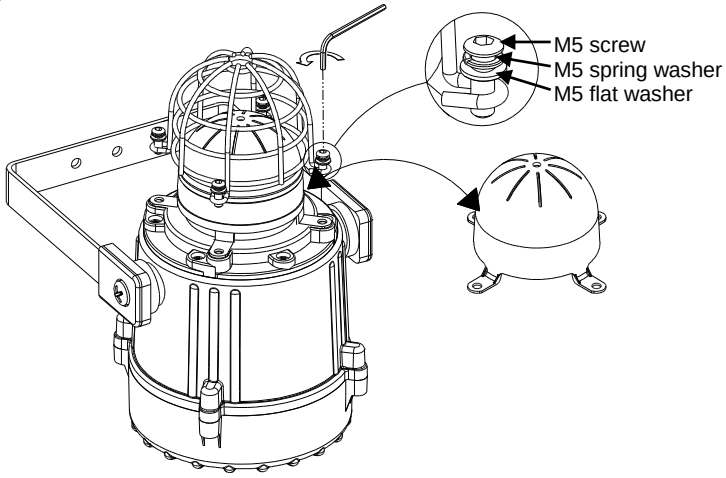

Fig. 9 Replacement of beacon lens cover

Fit the wire guard back onto the housing, over the new lens cover aligning the fixing holes of the guard, lens cover and housing. Refit the fixings to hold into place, the fixings MUST be fitted in the order shown above.

11) Maintenance, Overhaul & Repair

Maintenance, repair and overhaul of the equipment should only be carried out by suitably qualified personnel in accordance with the current relevant standards:

EN60079-19 IEC60079-19	Explosive atmospheres - Equipment repair, overhaul and reclamation
EN 60079-17 IEC60079-17	Explosive atmospheres - Electrical installations inspection and maintenance

To avoid a possible ELECTROSTACTIC CHARGE the unit must only be cleaned with a damp cloth.

Units must not be opened while an explosive atmosphere is present.

If opening the unit during maintenance operations a clean environment must be maintained and any dust layer removed prior to opening the unit.