Brand of NTN corporation

Technical data

EXEHE208

Bearing units



Grey cast housing, radial insert ball bearing with eccentric locking collar, seal with slinger

KIT CONTENT

EX.208.G2, EHE208

VISUAL (S)

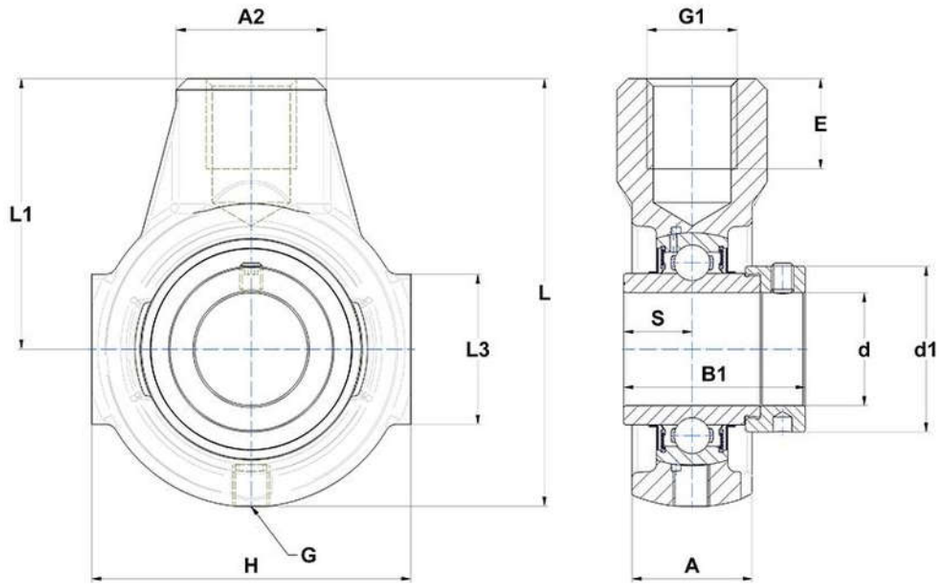

PRODUCT DEFINITION

Brand	SNR
A - Housing width	36 mm
A2	40 mm
B1 - Overall width Inner Ring	56,3 mm
d - Shaft diameter	40 mm
d1 - Outer dia of eccent. Lock. collar / nut of adapter sleeve	58 mm

EXEHE208
Bearing units

PRODUCT DEFINITION	
E - Mounting hole thread depth	24 mm
G - Grease fitting	R1/8"
G1 - Thread size	M24
H - Housing length, width or diameter	100 mm
L - Housing length	135 mm
L1 - Distance attachment end face to bearing centerline	85 mm
L3 - Length of guidance slot/face	45 mm
S - Distance front side/bearing centre	21,4 mm

PRODUCT PERFORMANCE	
C - Dynamic load rating	29600000 mN
C0 - Static load rating	18200000 mN
Operating temperature min.	253,15 °K
Operating temperature max.	373,15 °K

OTHER FEATURES	
Mass	1,68 kg
Recommended tightening torque for set screw	11.5 N-m