Brand of NTN corporation

Technical data

UCFLE207-20

Bearing units



Grey cast housing, radial insert ball bearing with socket set screws,seal with slinger

KIT CONTENT

UC207-20G2, FLE207

VISUAL (S)

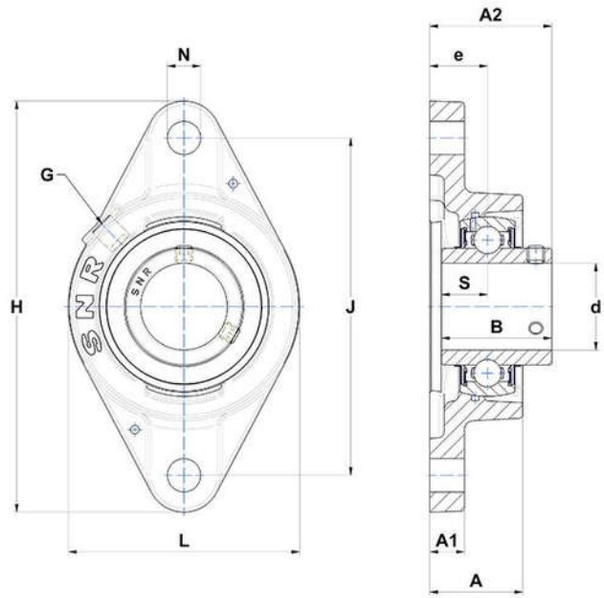

PRODUCT DEFINITION

Brand	SNR
A - Housing height	33,7 mm
A1 - Housing foot height / flange height	12,5 mm
A2 - Total height from mounting surface	46,4 mm
B - Width of Inner Ring	42,9 mm
d - Shaft diameter	31,75 mm

NTN Europe
1 rue des Usines · BP 2017 · 74010 Annecy Cedex · France · Tel. +33 (0)4 50 65 30 00
S.A. au capital de 322 639 919 € · RCS ANNECY B 325 821 072 · Id. Fiscale : FR 48 325 821 072
SIRET 325 821 072 00015 · Code APE 2815 Z · Code NACE 28.15

PRODUCT DEFINITION	
e - Distance mounting surface to bearing center	21 mm
G - Grease fitting	R1/8"
H - Housing length, width or diameter	155 mm
J - Mounting holes distance	130 mm
L - Housing width / diameter	92 mm
N - Mounting hole dimension	14 mm
S - Distance front side/bearing centre	17,5 mm

PRODUCT PERFORMANCE	
C - Dynamic load rating	25700000 mN
C0 - Static load rating	15200000 mN
Operating temperature min.	253,15 °K
Operating temperature max.	373,15 °K

OTHER FEATURES	
Mass	1,23 kg
Recommended tightening torque for set screw	8 N-m