IP series

Latching action pushbutton switches for harsh environments

Distinctive features and specifications



- **Latching action**
  Actuator remains in the low position when "ON".
- **Illuminated and non-illuminated**
- **Compact**
  Behind-panel depth less than 20 mm (.787)

New!

- **Flat round actuator for optional marking**
- **Sealed to IP 67**

B

ENVIRONMENTAL SPECIFICATIONS

- Degree of protection : IP 67 - See details page B36.
- Shock resistance : 100 g according to IEC 512-4, test 6c
- Vibration resistance : 10-500Hz - 10 g according to IEC 512-4, test 6d
- Salt spray : IEC 512-6, test 11f
- Robustness (non-illuminated sw.) : IK06 according to EN 50102 (1 joule)
- Operating temperature : -40°C to +85°C

ELECTRICAL AND GENERAL SPECIFICATIONS

- Max. current/voltage rating with resistive load :
  100mA 24VDC - life expectancy 200 000 cycles
  2A 125VAC - life expectancy 10 000 cycles (tested according to UL 1054)
- Initial contact resistance : 100 mΩ max.
- Insulation resistance : 1 GΩ min. at 500VDC
- Dielectric strength : 1.500 VAC rms between terminals
  1.000 VAC rms between terminals and frame
- Panel thickness : 1,5 mm (.059) min. - 5,5 mm (.217) max.
- Total travel : 2,5 mm (.098)
- Operating force : 5,5 N +/- 1N
- Contact bounce : 10 ms
- Torque : 1,5 Nm applied to nut
- Soldering : 320°C max. for 3 seconds

LED COMPONENT SPECIFICATIONS			
LED colour	Forward current	Forward Voltage	Max. lumin. intensity
Super red (L0S)	20mA	2V	180 mcd
Yellow (L0Y)	20mA	2V	280 mcd
Green (L0G)	10mA	2V	28 mcd
Blue (L0B)	10mA	3,5V	22 mcd

A resistor must be series-connected by the user.

$$\text{Resistor value} = \frac{\text{supply voltage - LED forward voltage}}{\text{LED forward current}}$$

MATERIALS

- Case : PA-6T, UL 94-V0
- Plunger : polyamide 6/6
- Bushing/bezel : zinc die-cast (zamak), black painted
- Contacts : silver, gold plated
- Multi-wire lead AWG20, section 0,6 mm^2, UL approved
- LED wire : AWG26
- Lens : polycarbonate
- Terminal seal : epoxy

IP series

Latching action pushbutton switches for harsh environments

Overview

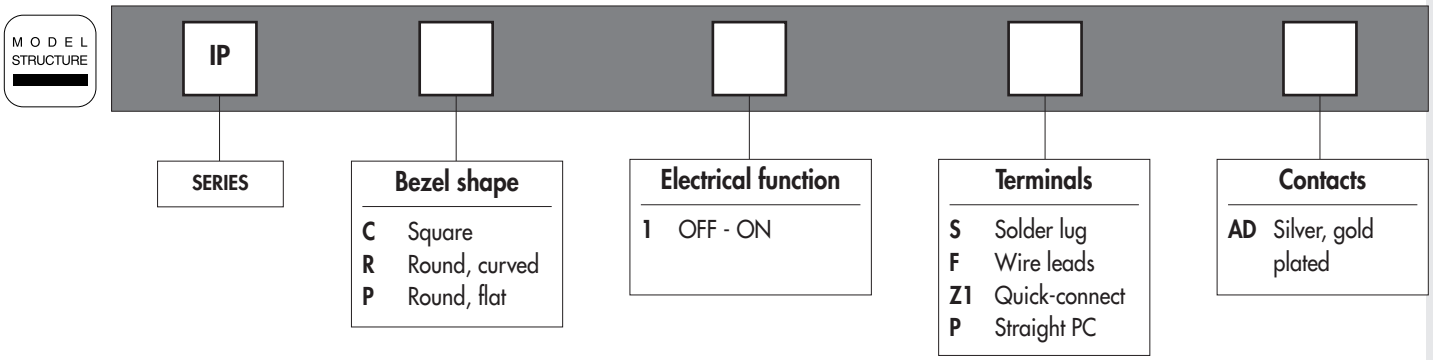

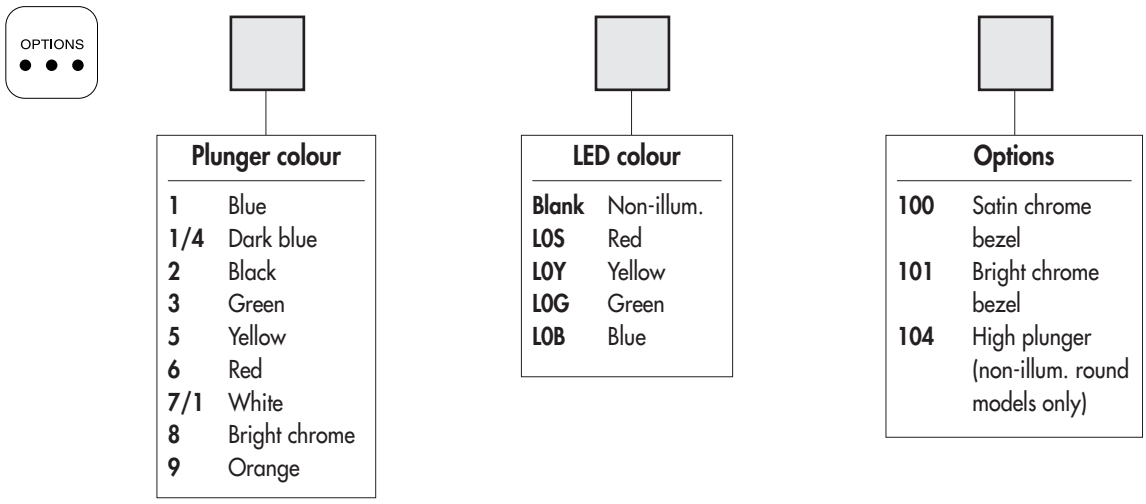

B

ABOUT THIS SERIES
On the following pages, you will find successively :
model structure of switches and options in the same order as in above chart

Dimensions : first dimensions are in mm while inches are shown as bracketted numbers.

NOTICE : please note that not all combinations of above numbers are available.
Refer to the following pages for further information.

A sealing boot is available to protect the switches against frost and sand (P/N U5125).
It is presented at the end of the IP series and in section H.

Mounting accessories : Standard hardware supplied : 1 hex nut 14 mm (.551) across flats and 1 O-Ring.

Packaging unit : 25 pieces

IP series

Latching action pushbutton switches for harsh environments

Square or round - illuminated

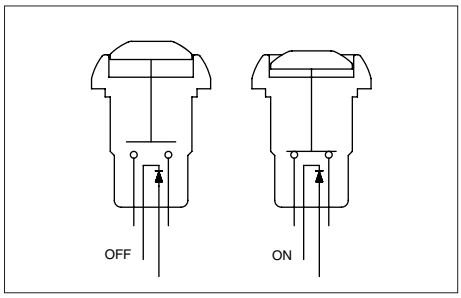

- Four LED colours
- Tin plated LED terminals

Straight **P**

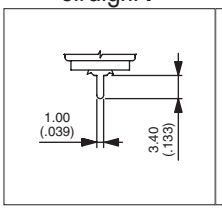

Quick-connect **Z1**

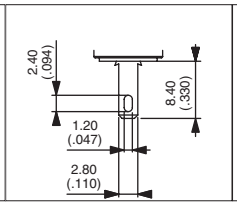

Solder lug **S**

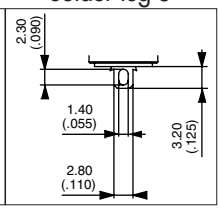

MODEL STRUCTURE

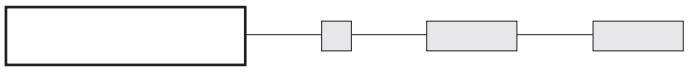

B

Square models



Solder lug terminals
IPC1SAD OFF - ON

Wire lead terminals
IPC1FAD OFF - ON

Flat

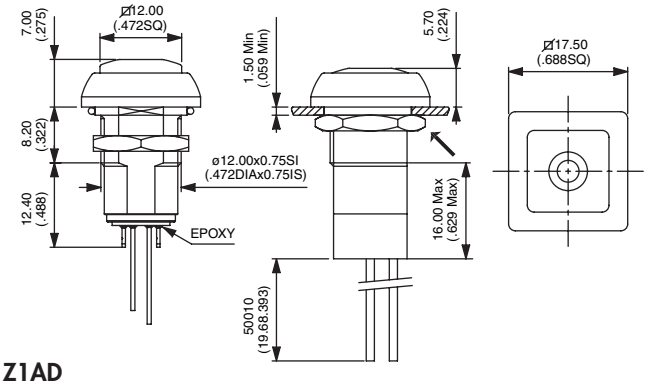

Also available with straight PC : **IPC1PAD** or quick-connect terminals : **IPC1Z1AD**

Round models



Solder lug terminals
IPR1SAD OFF - ON

Wire lead terminals
IPR1FAD OFF - ON

Flat

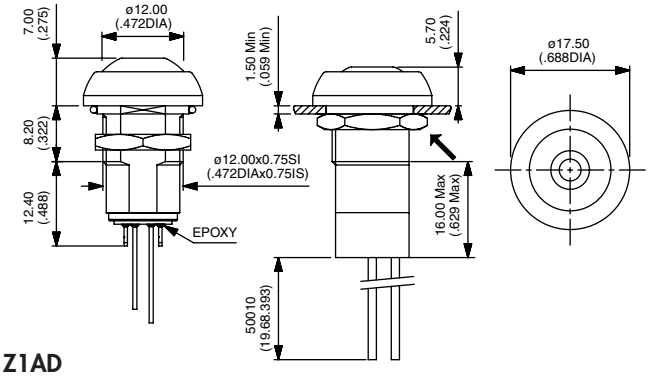

Also available with straight PC : **IPR1PAD** or quick-connect terminals : **IPR1Z1AD**

PLUNGER COLOUR

Wire colours : black : contact, red : LED anode(+), blue : LED cathode(-)



1 : blue - **1/4** : dark blue - **2** : black - **3** : green - **5** : yellow - **6** : red - **7/1** : white - **8** : bright chrome - **9** : orange

LED COLOUR

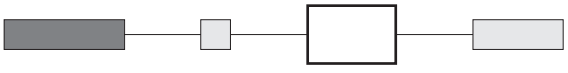

L0S : red - **L0Y** : yellow - **L0G** : green - **L0B** : blue

OPTIONS

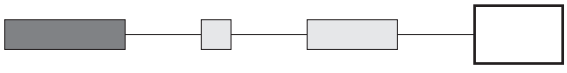

100 : Satin chrome bezel
101 : Bright chrome bezel

IP series

Latching action pushbutton switches for harsh environments

Square or round - non-illuminated

MODEL STRUCTURE

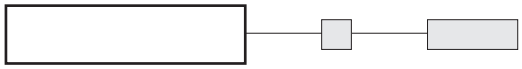

Square models



Solder lug terminals
IPC1SAD OFF - ON

Wire lead terminals
IPC1FAD OFF - ON

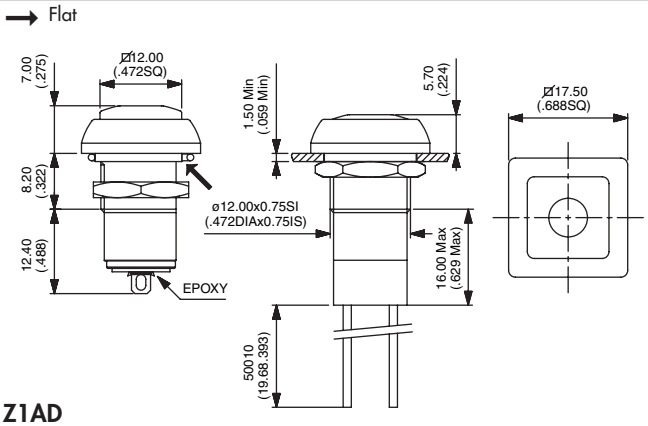

Also available with straight PC : **IPC1PAD** or quick-connect terminals : **IPC1Z1AD**

Round models



CURVED ACTUATOR
Solder lug terminals
IPR1SAD OFF - ON
Wire lead terminals
IPR1FAD OFF - ON

FLAT ACTUATOR
Solder lug terminals
IPP1SAD OFF - ON
Wire lead terminals
IPP1FAD OFF - ON

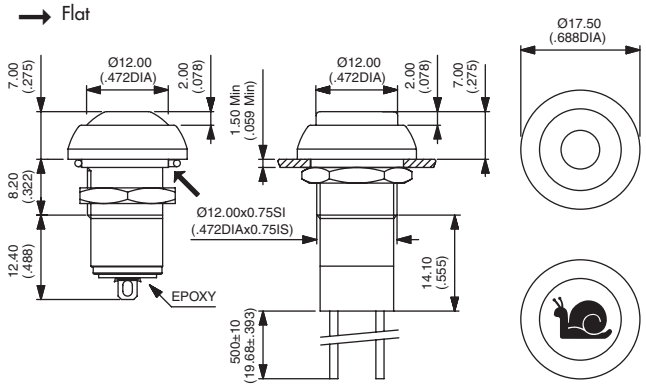

Also available with straight PC : **IP•1PAD** or quick-connect terminals : **IP•1Z1AD**

PLUNGER COLOUR

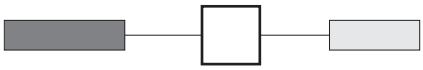

Plunger marking available on IPP models (symbol 10 mm max.). On request.

1 : blue - **1/4** : dark blue - **2** : black - **3** : green - **5** : yellow - **6** : red - **7/1** : white - **8** : bright chrome - **9** : orange

OPTIONS

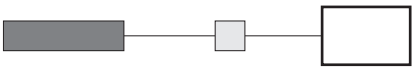

100 : Satin chrome bezel
101 : Bright chrome bezel
104 : High plunger (for round model only)

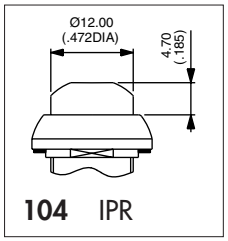

104 IPR

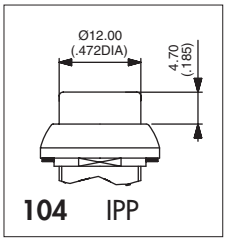

104 IPP

MOUNTING

Panel cut-out

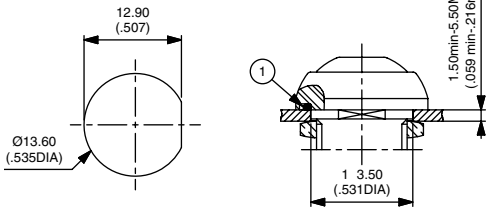

Matrix mounting

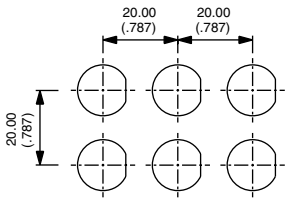

Back of panel space requirement

