NU 2307 ECP

Popular item
SKF Explorer

Dimensions

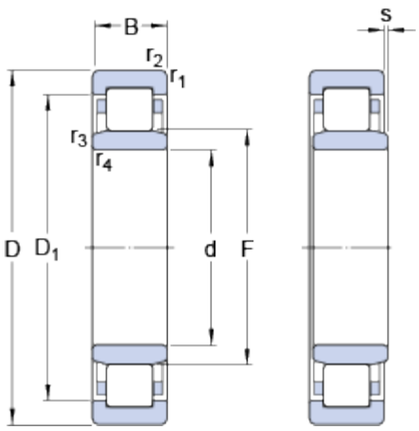

d		35	mm
D		80	mm
B		31	mm
D_1	≈	65.8	mm
F		46.2	mm
$r_{1,2}$	min.	1.5	mm
$r_{3,4}$	min.	1.1	mm
s	max.	2.7	mm

Abutment dimensions

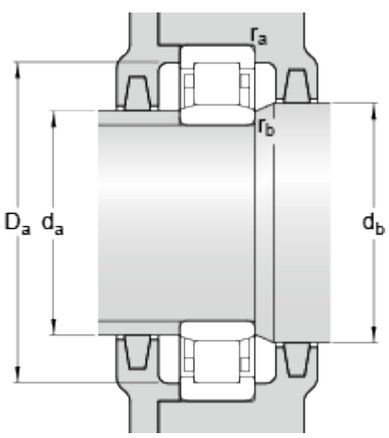

d_a	min.	42	mm
d_a	max.	44	mm
d_b	min.	48	mm
D_a	max.	72.2	mm
r_a	max.	1.5	mm
r_b	max.	1	mm

Calculation data

Basic dynamic load rating	C	106	kN
Basic static load rating	C_0	98	kN
Fatigue load limit	P_u	12.7	kN
Reference speed		9500	r/min
Limiting speed		11000	r/min
Calculation factor	k_r	0.25	
Limiting value	e	0.3	
Axial load factor	Y	0.4	

Mass

Mass bearing	0.72	kg