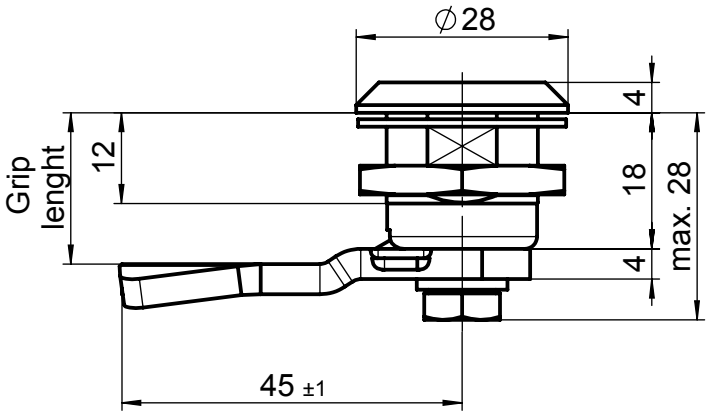

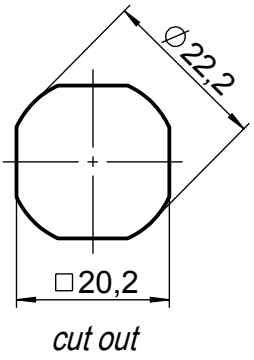

cut out

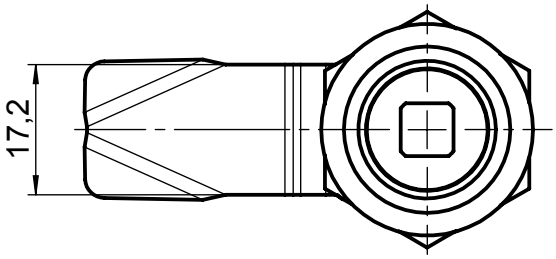

Art. No.	Grip length
341-0242	13mm
341-0258	20mm
341-0264	26mm
341-0270	32mm