Inductive sensor
With analog output
NI25-CK40-LIU-H1141

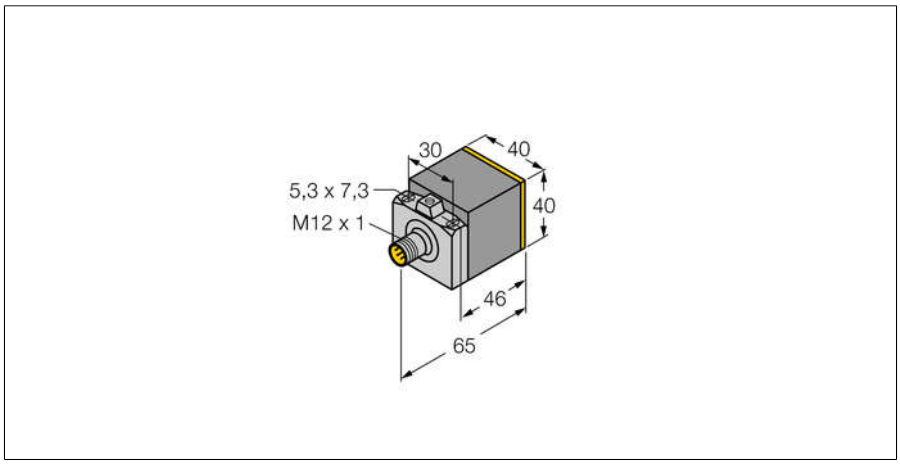

- **Rectangular, height 40 mm**
- **Variable orientation of active face in 5 directions**
- **Plastic, PBT-GF30-V0**
- **4-wire, 15…30 VDC**
- **Analog output**
- **0…10 V and 0…20 mA**
- **M12 x 1 male connector**

Wiring Diagram

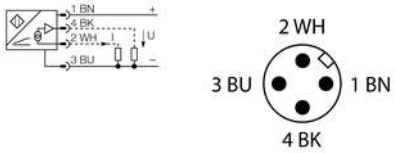

Measuring Range

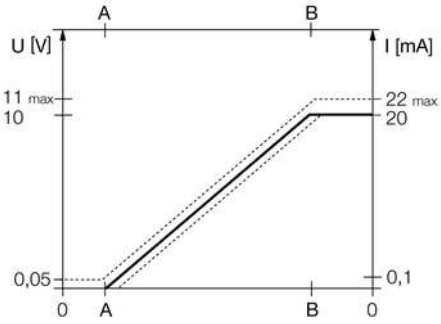

Type designation	NI25-CK40-LIU-H1141
Ident no.	1537802

Measuring range	5…25 mm mm
Mounting conditions	Non-flush
Correction factors	St37 = 1; Al = 0.3; stainless steel = 0.7; Ms = 0.4
Repeatability	≤ 1 % of measuring range |A - B|
	≤ 0.5 %, after warm-up 0.5 h
Reproducibility	≤ 200 µm
	≤ 100 µm, after a warm-up time of 0.5 h
Linearity deviation	≤ 5 %
Temperature drift	≤ ± 0.06 % / K
Ambient temperature	-25…+70 °C

Operating voltage	15…30 VDC
Residual ripple	≤ 10 % U_{ss}
No-load current I_0	≤ 8 mA
Isolation test voltage	≤ 0.5 kV
Short-circuit protection	yes
Wire breakage/Reverse polarity protection	no/ Complete
Output function	4-wire, Analog output
Voltage output	0…10V
Current output	0…20 mA
Load resistance voltage output	≥ 4.7 kΩ
Load resistance, current output	≤ 0.4 kΩ
Measuring sequence frequency	30 Hz

Design	Rectangular,CK40
Dimensions	65 x 40 x 40 mm
	variable orientation of active face in 5 directions
Housing material	Plastic, PBT-GF20-V0, Black
Active area material	Plastic, PA12-GF30, yellow
Electrical connection	Connectors, M12 × 1
Vibration resistance	55 Hz (1 mm)
Shock resistance	30 g (11 ms)
Protection class	IP67
MTTF	751 years acc. to SN 29500 (Ed. 99) 40 °C

Included in delivery	BS1-CK40

Edition • 2019-02-15T19:23:46+01:00

Inductive sensor
With analog output
NI25-CK40-LIU-H1141

Distance D	120 mm
Distance W	75 mm
Distance S	120 mm
Distance G	150 mm
Distance N	40 mm
Width active area B	40 mm

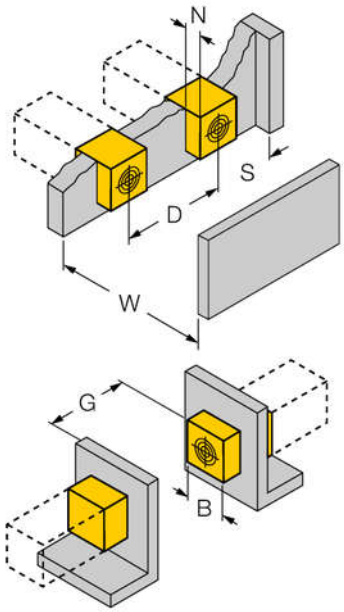

Edition • 2019-02-15T19:23:46+01:00

Hans Turck GmbH & Co.KG ● D-45472 Mülheim an der Ruhr ● Witzlebenstraße 7 ● Tel. 0208 4952-0 ● Fax 0208 4952-264 ● more@turck.com ● www.turck.com

Inductive sensor
With analog output
NI25-CK40-LIU-H1141

Accessories

Type code	Ident no.	Description	
IM43-13-SR	7540041	Trip amplifier; 1-channel; input 0/4…20 mA or 0/2…10 V; supply of 2- or 3-wire transmitters/sensors; limit value adjustment via teach button; three relay outputs with one NO contact each; removable terminal blocks; 27 mm wide; universal voltage supply 20…250 VUC; further Limit value indicators are described in our "Interface Technology" catalog.	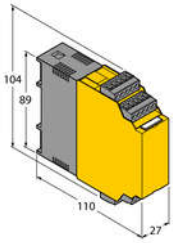
BSS-CP40	6901318	Mounting bracket for rectangular devices; material: Polypropylene	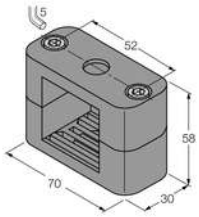

Edition • 2019-02-15T19:23:46+01:00

 Hans Turck GmbH & Co.KG ● D-45472 Mülheim an der Ruhr ● Witzlebenstraße 7 ● Tel. 0208 4952-0 ● Fax 0208 4952-264 ● more@turck.com ● www.turck.com