Product sheet

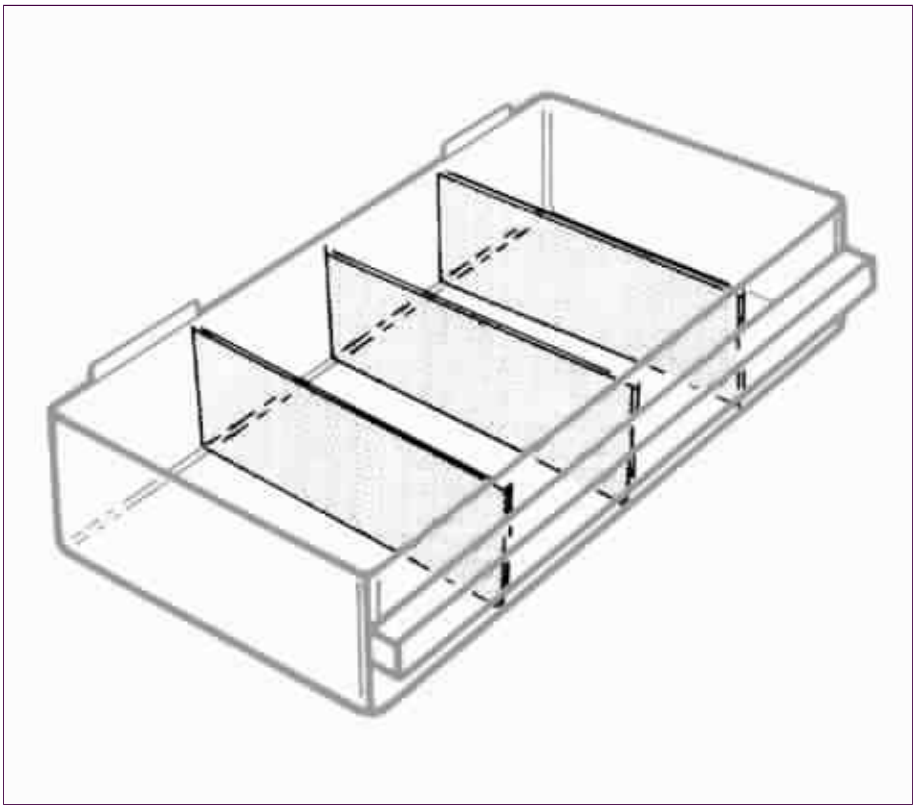

Item number/name **102049**

Divider 150-03/04

EAN unitnumber 5733439102049

Colour Clear

Description of the item

Dividers (16 in each pack).
Can be used for both 150-03 and 150-04 drawers.

BOM items

Item number	Product	Quantity
223157	DIV 57/135	16
201117	16x57/135 POSE CLEAR 03-divider	1

Materials

Item number	Material
600132	Polypropylene - PP

Item dimensions

Net. Depth (mm) .....:	1,8
Net. Width (mm) .....:	134,0
Net. Height (mm) .....:	50,0
Inner Depth (mm) .....:	0,0
Inner Width (mm).....:	0,0
Inner Height (mm) .....:	0,0

Weight

Net weight (Kgs).....:	0,169
Tare weight (Kgs).....:	0,016
Gross weight (Kgs).....:	0,185

Volume

Multiple (Pieces).....:	25,00
Volume (m3).....:	0,00048

Capacity load

Carr. Load (Kgs).....:	0,00
Carr. Load (Ltrs).....:	0,00

Sales

raaco Great Britain Ltd
VAT No.: GB 232 6219 86
Wenrisc House, Meadow Court
High Street, Witney
Oxfordshire OX28 6ER
Tel: (01993) 776333
Fax: (01993) 776444

Headquarters:

raaco A/S
CVR No.: DK 22 12 28 19
VAT No.: DK 91 42 64 55
Platanvej 19
DK-4800 Nykøbing F
Tel.: +45 54 88 84 00

Inquiries on this or any of our products: Tel: (01993) 776333 - Fax: (01993) 776444 - E-mail: gbmail@raaco.com - www.raaco.com