**M12 male 0° / M12 female 0° A-cod.**

PUR 5x0.34 gy UL/CSA+drag ch. 6m

Male straight – female straight
M12 – M12, 5-pole
A-coded
Art-No. 7005 - M12 Lite - (plastic hexagonal screw) on request
Plastic housings with good resistance against chemicals and oils.
The resistance to aggressive media should be individually tested for your application. Further details on request.
Further cable lengths on request.

## Link to Product

**Illustration**

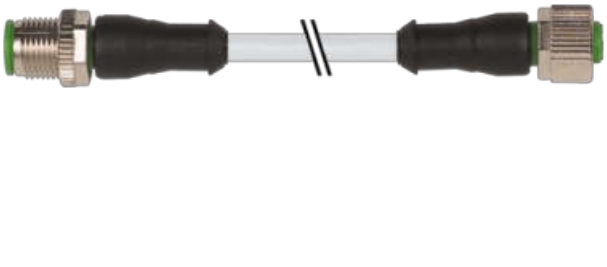

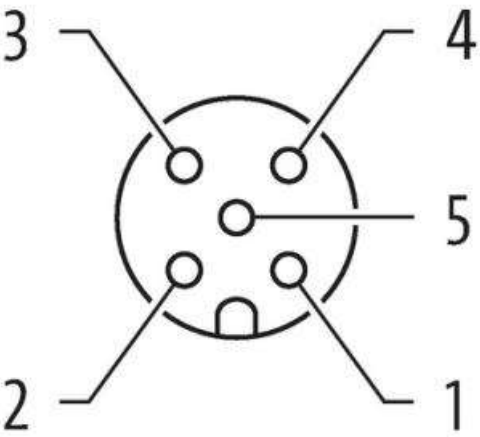


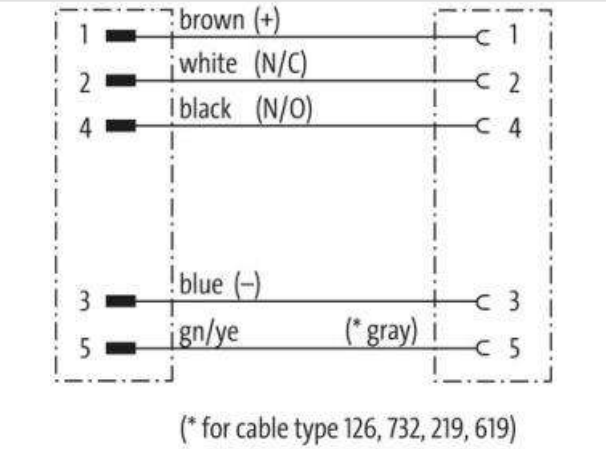


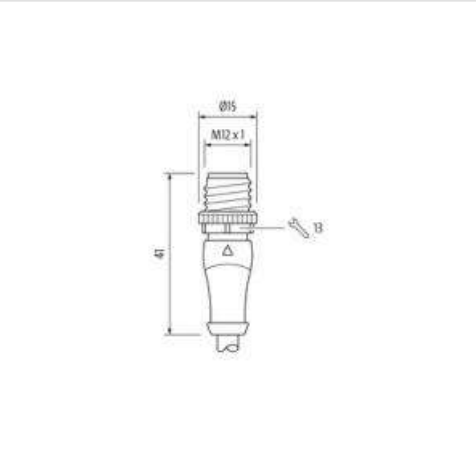


The information in this Product-PDF has been compiled with the utmost care.
Liability for the correctness completeness and topicality of the information is restricted to gross negligence. Version: 2024-01-31

MURR ELEKTRONIK
stay connected

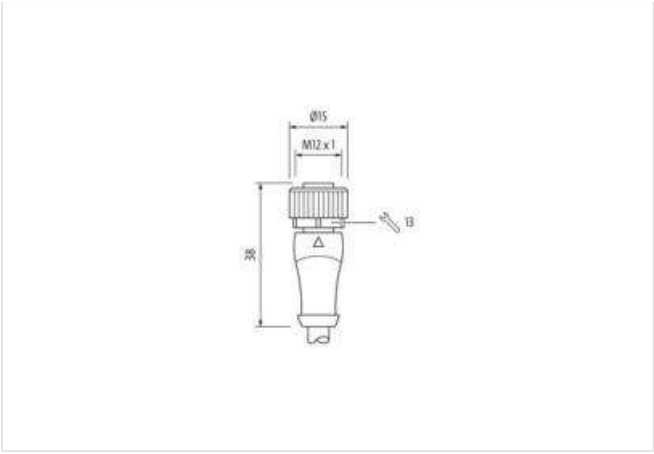


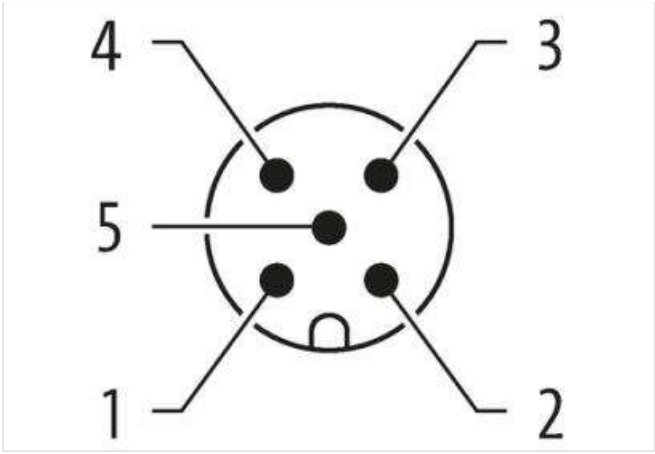


Product may differ from Image

| | |
|---|---|
| Cable length | 6 m |
| **Side 1** | |
| Tightening torque | 0,6 Nm |
| Mounting method | inserted, screwed |
| Family construction form | M12 |
| Thread | M12 x 1 |
| suitable for corrugated tube (internal Ø) | 10 mm |
| Coding | A |
| Material | PUR |
| Width across flats | SW13 |
| Degree of protection (EN IEC 60529) | IP65, IP66K, IP67 |
| **Side 2** | |
| Tightening torque | 0,6 Nm |
| Mounting method | inserted, screwed |
| Family construction form | M12 |
| Thread | M12 x 1 |
| suitable for corrugated tube (internal Ø) | 10 mm |
| Coding | A |
| Material | PUR |
| Width across flats | SW13 |
| **Commercial data** | |
| ECLASS-6.0 | 27279218 |
| ECLASS-7.0 | 27279218 |
| ECLASS-8.0 | 27279218 |
| ECLASS-9.0 | 27060311 |
| ECLASS-10.1 | 27060311 |
| ECLASS-11.1 | 27060311 |
| ECLASS-12.0 | 27060311 |
| ETIM-5.0 | EC001855 |
| customs tariff number | 85444290 |
| GTIN | 4048879182140 |
| Packaging unit | 1 |

The information in this Product-PDF has been compiled with the utmost care.
Liability for the correctness completeness and topicality of the information is restricted to gross negligence. Version: 2024-01-31

MURR ELEKTRONIK
stay connected

| | |
|---|---|
| **Electrical data \| Supply** | |
| Operating voltage AC max. | 125 V |
| Operating voltage DC max. | 125 V |
| Operating voltage AC (UL-listed) | 30 V |
| Operating voltage DC (UL-listed) | 30 V |
| Current operating per contact max. | 4 A |
| **Installation \| Connection** | |
| Mounting set | M12 x 1 |
| **Device protection \| Electrical** | |
| Additional condition protection degree | inserted, screwed |
| Pollution Degree | 3 |
| Rated surge voltage | 1,5 kV |
| Material group (IEC 60664-1) | I |
| **Mechanical data \| Material data** | |
| Coating locking | Nickeled |
| Coating of fitting | nickel plated |
| Locking material | Zinc die-casting |
| Material screw connection | Zinc die-casting |
| **Mechanical data \| Mounting data** | |
| Mounting method | inserted, screwed, Shaking protection |
| **Environmental characteristics \| Climatic** | |
| Operating temperature min. | -25 °C |
| Operating temperature max. | 85 °C |
| Additional condition temperature range | depending on cable quality |
| **Conformities, approvals** | |
| Product standard | DIN EN 61076-2-101 (M12) |
| **Cable** | |
| No./diameter of wires | 5× 0.34 mm² |
| Wire isolation | PP (br, wh, bl, bk, gnye) |
| C-track properties | 10 Mio. |
| Outer Ø | 4.8 mm ±5% |
| Cable identification | 235 |
| Cable Type | 3 (PUR) |
| Approval (cable) | cURus (AWM-Style 20549/10493); CE conform |
| Cable weight [g/m] | 41,8 g |
| Material wire | Cu wire, bare |
| Resistor (core) | max. 57 Ω/km (20 °C) |
| Single wire Ø (core) | 0.1 mm |
| Construction (core) | 42× 0.1 mm (multi-strand wire class 6) |
| Diameter (core) | 5× 0.34 mm² |
| AWG | similar to AWG 22 |
| Material wire isolation | PP |
| Material property wire insulation | CFC-, halogen-, cadmium-, silicone- and lead-free |
| Shore hardness wire isolation | 70 ±5 D |
| Wire-Ø incl. isolation | 1.25 mm ±5% |
| Color/numbering of wires | br, bk, bl, wh, gnye longitudinally striped |
| Stranding combination | 5 wires twisted around central filler |
| Shield | no |
| Material jacket | PUR |
| Material property (jacket) | CFC-, halogen-, cadmium-, silicone- and lead-free, matt, low-adhesion, machine easy to process, abrasion-resistant, hydrolysis and microbial resistant |

The information in this Product-PDF has been compiled with the utmost care.
Liability for the correctness completeness and topicality of the information is restricted to gross negligence. Version: 2024-01-31

MURR ELEKTRONIK
stay connected

| | |
|---|---|
| Shore hardness jacket | 90 ±5 A |
| Outer-Ø (jacket) | 4.8 mm ±5% |
| Color jacket | gray |
| Jacket Color | gray |
| chemical resistance | good resistance to oil, gasoline and chemicals (EN 60811-404) |
| thermal resistance | flame-retardant according to UL 1581 Section 1090 (H), CSA FT2 / IEC 60332-2-2 |
| Nominal voltage | 300 V AC |
| Test voltage | 2500 V AC |
| Current load capacity | to DIN VDE 0298-4 |
| Temperature range (fixed) | -40...+80 °C |
| Temperature range (fixed) | -40...+80 °C, (+90 °C at max. 10 000 operating hours) |
| Temperature range (mobile) | -25...+80 °C |
| Temperature range (mobile) | -25...+80 °C, (+90 °C at max. 10 000 operating hours) |
| Bend radius (fixed) | 5× outer Ø |
| Bend radius (moving) | 10× outer Ø |
| Bend radius (moving) | 10× outer Ø |
| No. of bending cycles (C-track) | max. 10 Mio. (25 °C) |
| Travel speed (C-track) | max. 3 m/s |
| Acceleration (C-track) | max. 10 m/s² |
| Torsion stress | ±180°/m |
| No. of torsion cycles | max. 2 Mio. (25 °C) |
| Torsion speed | 35 cycles/min |
| Material jacket | PUR (UL/CSA) |

The information in this Product-PDF has been compiled with the utmost care.
Liability for the correctness completeness and topicality of the information is restricted to gross negligence. Version: 2024-01-31