ExTemp Series

Intrinsically Safe Infrared Temperature Sensor and LCT Loop Configuration Tool Operator's Guide



CALEX
ELECTRONICS LIMITED

INTRODUCTION

ExTemp intrinsically safe non-contact infrared temperature sensors measure the temperature of an area of the surface of a solid or liquid, and transmit this as a two-wire, linear 4-20 mA output.

Temperature ranges from -20°C to 1000°C are available. All models have an adjustable emissivity setting, and may be used to measure a wide variety of target materials, including food, paper, textiles, plastics, leather, tobacco, pharmaceuticals, chemicals, rubber, coal, asphalt and paint.

A choice of precision optics is available to measure small or large targets at short or long distances.

The optional LCT Loop Configuration Tools (USB and RS-485 adapters) and free software allow the ExTemp to be connected to a PC, PLC or SCADA system for temperature indication, sensor configuration and data acquisition.

These sensors are designed primarily for use in hazardous areas in conjunction with a suitable safety barrier or isolator. All models have been certified Intrinsically Safe for use in gas and dust hazardous areas by Certification Management Ltd. They comply with the European ATEX Directive 2014/34/EU and are covered by certificates for IECEx (international) and UKCA (United Kingdom). The ExTemp Series is also approved for use in Japan (JNIOSH-TR-46-1:2020 (General requirements); JNIOSH-TR-46-6:2015 (Intrinsic Safety "i")).

⚠ IMPORTANT INFORMATION FOR USE:

Voltage **MUST** be supplied by a suitably rated safety barrier or isolator.

For re-configuration of the sensor, the LCT **MUST** be connected in the safe area, behind the protection of a safety barrier or isolator.

The ExTemp dust certification relies upon the ingress protection provided by the device enclosure and therefore the device **MUST NOT** be opened. Care should be taken to avoid inadvertently loosening the cable gland when tightening locknuts.

Do not attempt to repair a faulty unit. Contact the vendor to arrange a return.

CONFORMANCE TO REQUIREMENTS

This product has passed a high voltage withstand test up to 700 VDC.

This product utilises the reduced creepage and clearance distances of ANNEX F by meeting the requirements of **IP65** and an **Overvoltage Category I**.

SAFETY PARAMETERS:

The device must not be used outside of the ambient temperature range (Ta), or subjected to voltages, current or power greater than those listed below, in order to ensure safe operation of the device:

Ui = 28 V		Ta = -20°C to +70°C	
Ii = 93 mA		Ci = 8 nF	
Pi = 651 mW		Li = 0 mH	

INTRINSIC SAFETY CERTIFICATION

All models of the ExTemp have been issued an ATEX (CML 14ATEX2079) Certificate for use in both gas and dust explosive atmospheres in above ground installations.

Given the ExTemp conforms to the highest level of protection 'ia', it is suitable for use in all Zones. The maximum energy stored in the device and the maximum surface temperature in both normal operation, and under fault conditions, also make the ExTemp suitable for use within all Gas and Dust Groups with a temperature rating of T4 or lower.

Tables 1, 2 and 3 describe the ATEX Gas and Dust Groups, Gas and Dust Zones, and gas ignition temperature classifications in which the ExTemp is suitable:

	Zone	Description	Supported?
Gas	0	Explosive gas air mixture continuously present.	✓
	1	Explosive gas air mixture likely to occur in normal operation.	✓
	2	Explosive gas air mixture not likely to occur, and if it does it will only exist for a short time.	✓
Dust	20	Explosive atmosphere in the form of a cloud of combustible dust in air is continuously present, or for long periods or frequently.	✓
	21	Explosive atmosphere in the form of a cloud of combustible dust in air is likely to occur occasionally in normal operation.	✓
	22	Explosive atmosphere in the form of a cloud of combustible dust in air is not likely to occur in normal operation, but if it does occur, will only persist for a short period.	✓

Table 1: Gas and Dust Zones in which the ExTemp may be used

	Group	Definition	Supported?
Gas	IIA	e.g. Propane	✓
	IIB	e.g. Ethylene	✓
	IIC	e.g. Hydrogen	✓
Dust	IIIA	Combustible flyings	✓
	IIIB	Non-conductive dusts	✓
	IIIC	Conductive dusts	✓

Table 2: Gas and Dust Groups in which the ExTemp is suitable for use

Gas Ignition Temperature	Classification	Supported?
450 °C	T1	✓
300 °C	T2	✓
200 °C	T3	✓
135 °C	T4	✓
100 °C	T5	**NO**
85 °C	T6	**NO**

Table 3: Gas ignition temperature classifications to which the ExTemp conforms

MODEL NUMBERS

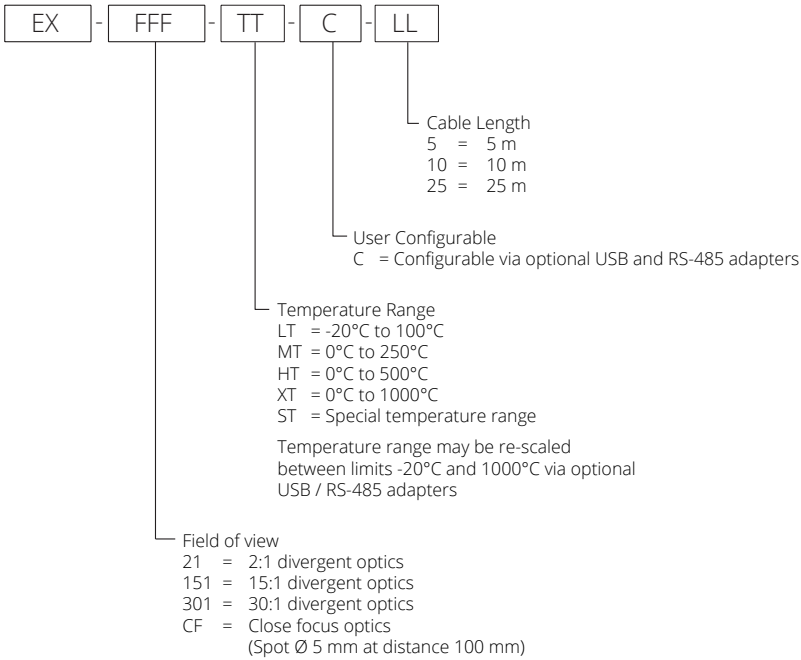

SPECIFICATIONS

General	
Temperature Range	-20°C to 1000°C (see table of Model Numbers)
Output	4 to 20 mA
Minimum Temperature Span	100°C
Maximum Temperature Span	1000°C
Field of View	See table of Model Numbers
Accuracy	± 1°C or 1% of reading, whichever is greater
Repeatability	± 0.5°C or 0.5%, whichever is greater
Emissivity Setting Range	0.20 to 1.00 (pre-set to 0.95)
Emissivity Setting Method	User configurable via optional USB / RS-485 adapters
Response Time, t90	240 ms (90% response)
Spectral Range	8 to 14 µm
Supply Voltage	12 to 24 V DC ± 5%
Minimum Sensor Voltage	11.4 V DC
Maximum Current Draw	25 mA
Electromagnetic Compatibility	Conforms to EN 61326-1, EN 61326-2-3 (Industrial)

Mechanical	
Construction	Stainless Steel 316
Major Dimensions	Ø 20 x length 150 mm (see Dimensions)
Mounting	M20 x 1.5 mm thread, length 46 mm, supplied with two mounting nuts
Cable Length	Choice of 5 m, 10 m or 25 m factory-fitted. Contact Calex for information about extending cable.
Weight with 5 m Cable	475 g

Environmental	
Environmental Rating	IP65 (NEMA 4)
Ambient Temperature Range	0°C to 70°C (Operating range)
Ambient Pressure Range	80 kPa (0.8 bar) to 110 kPa (1.1 bar)
Relative Humidity	Max. 95% non-condensing
CE Marked	Yes
RoHS Compliant	Yes

Hazardous Area Classification	
ATEX Classification	Ex II 1GD
IECEx Classification (Gas)	Ex ia IIC T4 Ga
IECEx Classification (Dust)	Ex ia IIIC T135°C IP65 Da
Ambient Temperature Rating	-20°C ≤ Ta ≤ 70°C
Maximum DC Input Voltage	Ui = 28 V
Maximum Input Current	Ii = 93 mA
Maximum Input Power	Pi = 651 mW
Maximum Internal Capacitance	Ci = 8 nF
Maximum Internal Inductance	Li = 0 mH
ATEX Certificate Number	CML 14ATEX2079
IECEx Certificate Number	IECEx CML 14.0032
JapanEx Certificate Number	CML 23JPN2141
UKCA Certificate Number	CML 21UKEX2001

DIMENSIONS

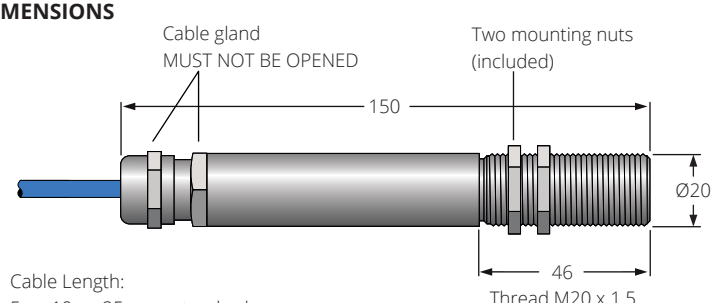

Cable Length:
5 m, 10 m, 25 m as standard
Contact Calex for information about extending the cable

All dimensions in mm

ACCESSORIES

A range of accessories to suit different applications and industrial environments is available as follows. These may be ordered at any time and added on-site:

- LCT Loop Configuration Tool (USB adapter)
- LCT-485 (RS-485 Modbus RTU network interface)
- Fixed and adjustable mounting brackets
- Air purge collar

OPTIONS

The following options are available. Options are factory installed and must be ordered with the sensor.

- Certificate of calibration
- Extended cable (25 m max. factory-fitted; contact Calex for information about extending the cable)

OPTICS

The below chart shows the measured spot diameter at the given distances from the sensing head and assumes 90% energy. The sensor may be used at longer distances than shown below, with a larger measured spot size.

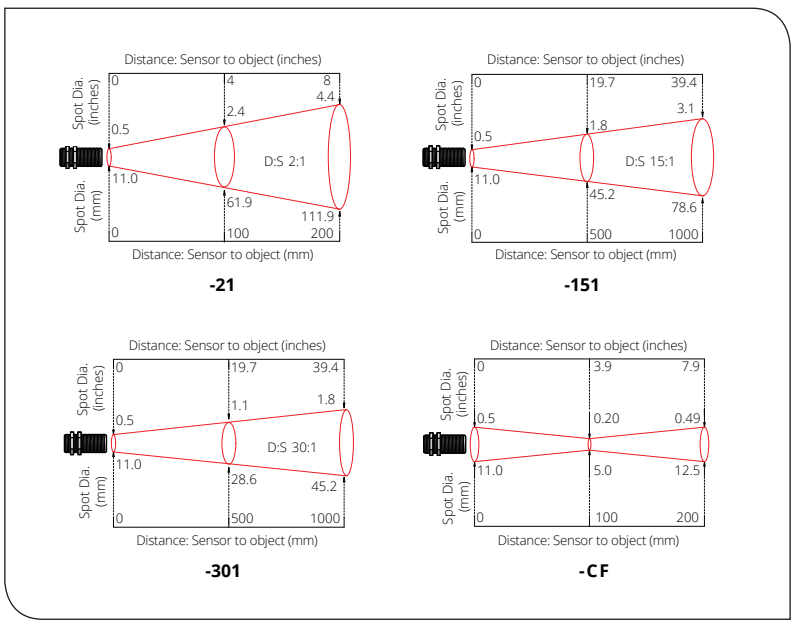

INSTALLATION AND MAINTENANCE

The installation process consists of the following stages:

1 Preparation
2 Mechanical installation
3 Electrical installation

Please read the following sections thoroughly before proceeding with the installation.

PREPARATION

Distance and Spot Size

Ensure the sensor is positioned so that it can only detect infrared radiation from the target.

The size of the area (spot size) to be measured determines the distance between the sensor and the target. The spot size must not be larger than the target. The sensor should be mounted so that the measured spot size is smaller than the target.

We normally recommend the target is at least twice the size of the given measured spot for maximum accuracy.

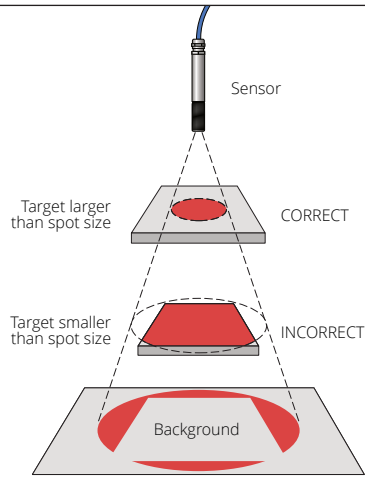

Ambient Temperature

The sensor is designed to operate in ambient temperatures from 0°C to 70°C.

Avoid thermal shock. Allow 20 minutes for the unit to adjust to large changes in ambient temperature.

Atmospheric Quality

Smoke, fumes or dust can contaminate the lens and cause errors in temperature measurement. In these types of environment, use of an air purge collar should be considered to help keep the lens clean.

Electrical Interference

To minimise electromagnetic interference or 'noise', the sensor should be mounted away from motors, generators and such like.

Wiring

Check the distance between the sensor and the indicating/controlling device. If necessary, the sensor can be ordered with a longer cable attached. Contact Calex for information about extending the cable.

Power Supply

A suitable intrinsically safe barrier or isolator must be used. See **Specifications** for the supply voltage, current and safety requirements.

MECHANICAL INSTALLATION

Mounting

All sensors come with a hard-wired cable and 2 mounting nuts. The sensor can be mounted on brackets or cut outs of your own design, or you can use the fixed and adjustable mounting bracket accessories, which are shown in the following diagram.

Note: The sensor must be connected to earth at one point, either the cable shield termination or the sensor housing.

Accessories are not covered by product certification; customers must conduct a risk assessment of the complete system before installation or use.

MOUNTING BRACKETS

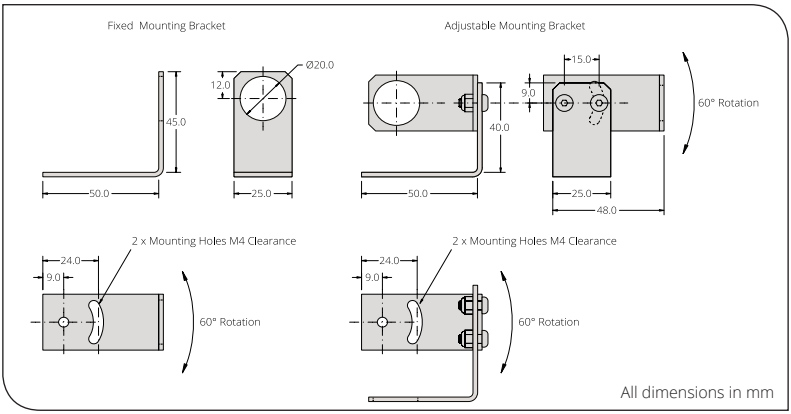

AIR PURGE COLLAR

The lens must be kept clean and dry for an accurate reading. The optional air purge collar is used to keep dust, fumes, moisture, and other contaminants away from the lens. It must be screwed on fully.

Air flows into the hose barb fitting and out of the front aperture. Air flow should be no more than 5 to 15 litres/min. Clean or 'instrument' air is recommended.

Air purge collar models APM and APMW are made of aluminium and must not be used in Zone 0.

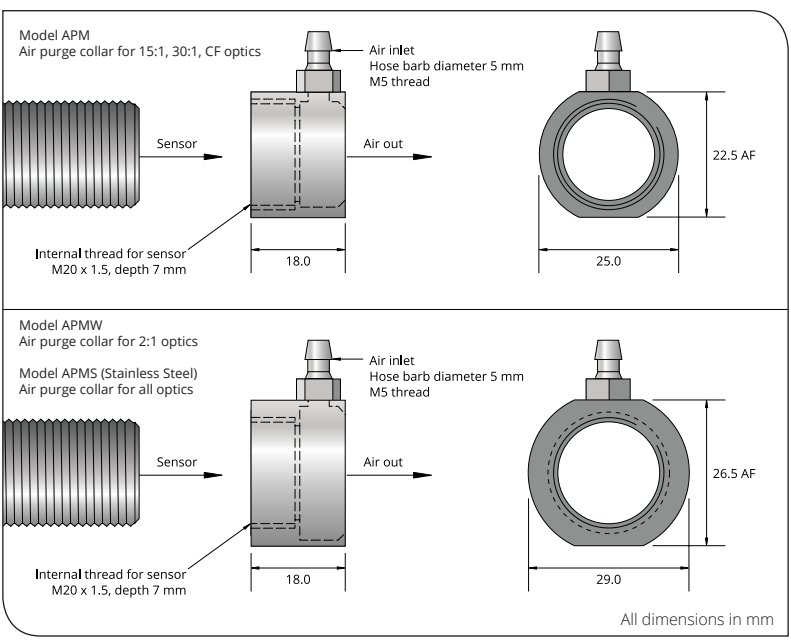

ELECTRICAL INSTALLATION

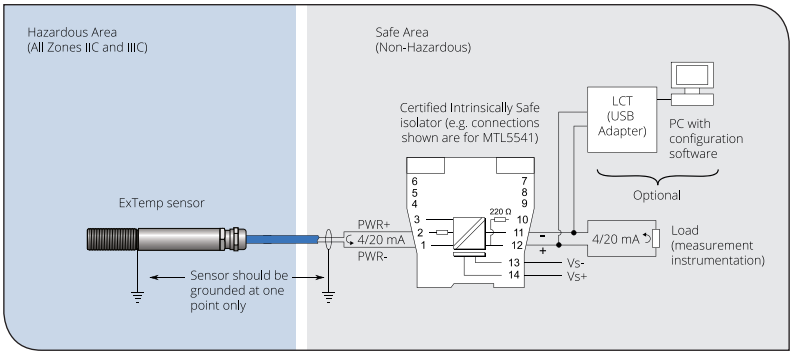

An alternative certified Intrinsically Safe isolator or safety barrier may be used. The connections shown above are for the suggested isolator, model MTL 5541.

WIRE IDENTIFICATION - EXTEMP SENSOR

Identification tags are attached to the PWR+ and PWR- wires. If the tags are removed, the wires can be identified by the numbers marked on the black insulation:

Wire Markings	Wire Identity
1	PWR+
2	PWR-

Table 4: Wire Identification

DIGITAL COMMUNICATION AND CONFIGURATION

A choice of two digital communication interfaces is available.

For temporary connection, configuration of the sensor, and diagnostics, we suggest the USB adapter, model LCT.

For continuous digital communications, configuration and data acquisition, we suggest the RS-485 Modbus network interface, model LCT-485.

The LCT and LCT-485 are not certified for use in hazardous areas. They must only be connected on the safe side of the safety barrier or isolator.

USB

All models are configurable via the optional USB adapter (Loop Configuration Tool, model LCT) and free CalexConfig configuration software.

The LCT has hook-type connectors and may be connected to the 4-20 mA loop as shown above.

For information about installing and using the LCT, see the **Loop Configuration Tool (LCT)** section of this manual.

RS-485 MODBUS

The optional LCT-485 Network Interface (not shown) allows an ExTemp sensor to be connected to an RS-485 Modbus RTU network for temperature measurement, configuration and data acquisition.

Each LCT-485 unit provides connectivity for one sensor, and multiple LCT-485 units can be connected to a single Modbus network.

See the ExTemp data sheet and LCT-485 Operator's Guide for more information.

CONFIGURABLE PARAMETERS

The following settings can be configured via CalexConfig.

Configuration settings are password protected. To access the Settings menu, go to the Unlock screen and enter the password. The default password is **1234.**

Temperature Units

On the temperature display screen, click °C or °F to switch between temperature units.

Output Range

Go to the Settings screen, then Output Range.

- **4 to 20 mA Output Scale**
  Set the temperature range limits for the 4 to 20 mA output, between the limits of -20°C and 1000°C.
  The difference between the temperatures at 4 mA and at 20 mA must be at least 100°C.
  The temperature at 20 mA must be greater than the temperature at 4 mA.
  Default setting: Depends on model, e.g. LT = -20°C to 100°C (see Model Numbers)

Output Processing

Go to the Settings screen, then Output Processing.

- **Averaging Period**
  Set the time, in seconds, over which the measured temperature is averaged.
  Note: averaging prevents the sensor from following rapid temperature changes.
  Default setting: 0
- **Peak/Valley Hold Processing**
  If required, hold processing can be applied by setting Hold Mode to “Peak” or “Valley” and setting the hold period. This is useful if the temperature reading is interrupted by gaps between moving objects, or by an obstruction.
  Default setting : OFF

Emissivity and Compensation

Go to the Settings screen, then Emissivity and Compensation.

- **Emissivity Setting**
  Enter the emissivity of the target. Target emissivity can be determined experimentally, or estimated using an emissivity table. For more information, contact Calex.
  Default setting: 0.95
- **Reflected Energy Compensation On/Off**
  If enabled, compensates for errors caused by reflected energy from hotter or colder objects. This should generally be kept OFF in most applications.
  Default setting: OFF
- **Reflected Temperature**
  Enter the temperature of the surroundings of the target for Reflected Energy Compensation. Changing this has no effect if Reflected Energy Compensation is OFF.

OPERATION

Once the sensor is in position, a suitable safety barrier or isolator is connected and configured, and the appropriate power and cable connections are secure, the system is ready for continuous operation by completing the following simple steps:

1. Turn on the power supply
2. Turn on the meter, chart recorder or controller
3. Read or monitor the temperature

IMPORTANT

Be aware of the following when using the sensor:

- If the sensor is exposed to significant changes in ambient temperature (hot to cold, or cold to hot), allow 20 minutes for the temperature to stabilise before taking or recording measurements.
- Do not operate the sensor or configuration tool near large electromagnetic fields (e.g. around arc welders, generators or induction heaters). Electromagnetic interference can cause measurement errors.
- Wires must be connected only to the appropriate terminals.
- Do not damage the cable, as this could provide a path for moisture and vapour to enter the sensor.
- Do not open the sensor housing. This will damage the sensor and invalidate the warranty.

MAINTENANCE

Our customer service representatives are available for application assistance, calibration, repair, and solutions to specific problems. Contact our Service Department before returning any equipment. In many cases, problems can be solved over the telephone. If the sensor is not performing as it should, try to match the symptom below to the problem. If the table does not help, contact us for further advice.

LENS CLEANING

Keep the lens clean and dry at all times. Any foreign matter on the lens would affect measurement accuracy. Blow off loose particles (if not using the air purge accessory) with an air 'puffer'.

If dust or condensation continuously forms on the lens, consider fitting an air purge collar.

TROUBLESHOOTING

Symptom	Probable Cause	Solution
No output	No power to sensor	Check power supply and wiring
Inaccurate measured temperature	Target too small for sensor's field of view	Ensure the sensor's view is completely filled by the target. Position the sensor closer to the target to measure a smaller area. Ensure the target is at least twice the size of the given measured spot.
	Target is a reflective metal surface	Measure a non-reflective area, or paint or coat a measurable area of the target to make it non-reflective
	Field of view obstruction	Remove obstruction; ensure sensor has a clear view of target
	Dust or condensation on lens	Ensure lens is clean and dry. Clean gently with a soft lens cloth and water. If problem recurs, consider using an air purge collar.
	Incorrect wire connections	Check wire markings - see Table 4: Wire Identification
	Output temperature scale mismatch	Re-scale input temperature range on measurement instrument to match sensor

LOOP CONFIGURATION TOOL (LCT)



The Loop Configuration Tool model LCT is a configuration adapter for ExTemp infrared temperature sensors.

It is designed to be connected to the 4 to 20 mA current loop on the safe side of an Intrinsically Safe barrier or isolator, and to a Windows PC via USB.

This manual describes how to connect the LCT and use it to configure the sensor. For information on connecting and using the sensor itself, please refer to the previous sections of this manual.

WARNING

This device MUST NOT be used in hazardous areas. It is not certified for use in explosive atmospheres and may only be connected on the safe side of a suitable, certified Intrinsically Safe barrier or isolator.

Do not attempt to repair a faulty unit. Contact the vendor to arrange a return.

ELECTRICAL CONNECTION

Connect the device to the 4 to 20 mA measurement loop via the hook-type connectors. For reliable communications, the total resistance R_L on the 4 to 20 mA loop should be within the range specified on the connection diagrams. You may need to connect a resistor in series with the existing measurement instrumentation on the 4 to 20 mA loop to ensure this.

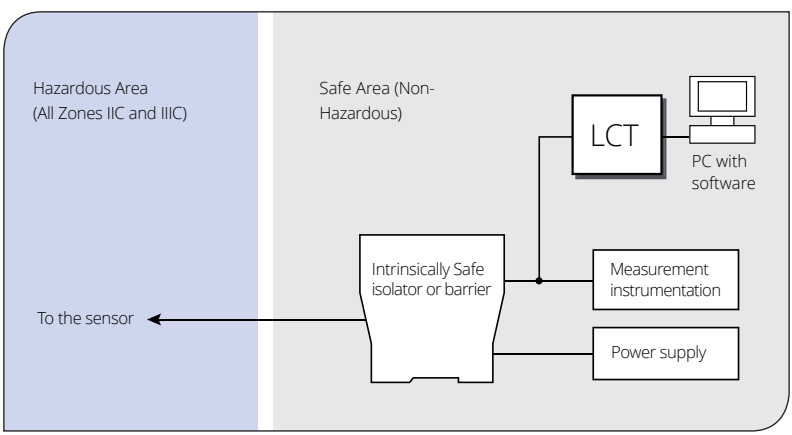

WIRE IDENTIFICATION - LCT

The LCT connectors are colour coded as follows:

Colour of Wire and Hook Connector	Polarity
Red	+
Black	-

EXAMPLE ISOLATOR: MODEL MTL5541

This isolator has an internal resistance of 220Ω. Two wiring configurations are possible, depending on whether or not this internal resistance is used.

Configuration A: 400 Ω ≤ RL ≤ 800 Ω (not using the internal resistance)

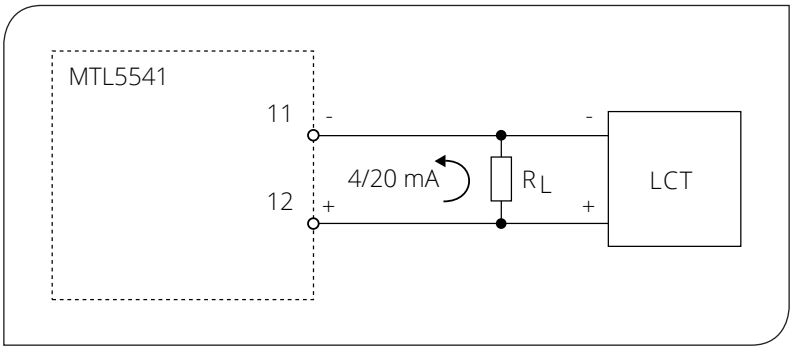

Configuration B: 180 Ω ≤ RL ≤ 580 Ω (using the internal resistance)

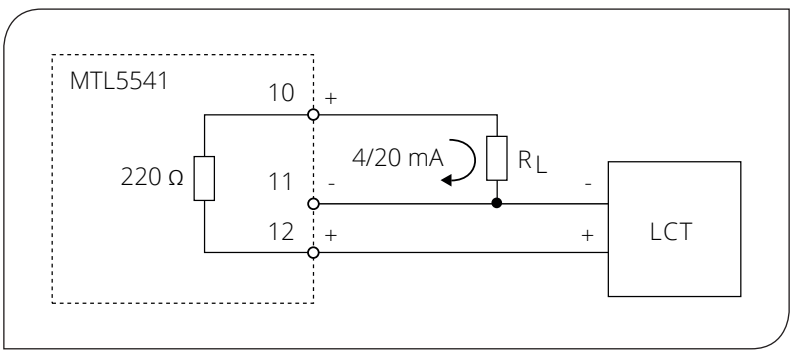

EXAMPLE BARRIER: MODEL MTL7706+

200 Ω ≤ RL ≤ 800 Ω

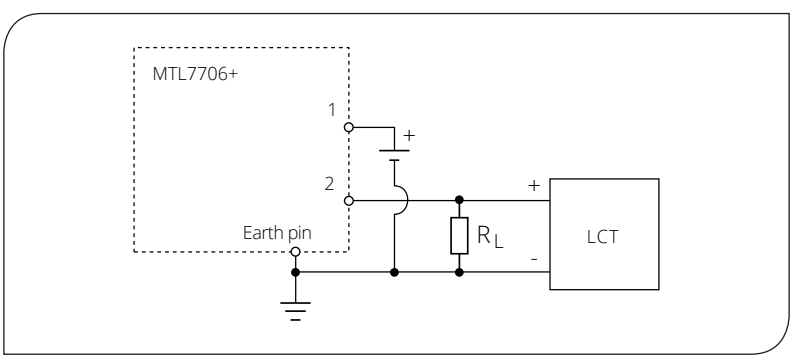

SOFTWARE

The latest version of the software is available for download from the Calex website at the following URL:

www.calex.co.uk/software

Install the software before connecting the LCT to a Windows PC. This will ensure the driver is properly installed.

USING THE SOFTWARE

See **Configurable Parameters** and the **Configuration Software** diagram opposite.

If the Settings icon is greyed out, the software is locked. Unlock the software to allow access to the Settings menu. The default password is 1234.

MAINTENANCE AND TROUBLESHOOTING

Our technical support engineers are available for application assistance, calibration, repair, and solutions to specific problems. Contact our Service Department before returning any equipment. In many cases, problems can be solved over the telephone. Contact us for further advice.

GUARANTEE

Calex guarantees each instrument it manufactures to be free from defect in material and workmanship under normal use and service for the period of two years from the date of purchase. This guarantee extends only to the original buyer according to the Calex Terms and Conditions of Sale.

CONFIGURATION SOFTWARE

Connection List

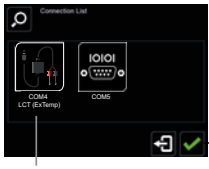

Select connected sensor:

LCT (USB adapter):
Select LCT on this screen

LCT-485 (RS-485 network interface):
Select COM port, then select LCT-485 on the next screen

Temperature Display



Start/stop data logging

Temperature List

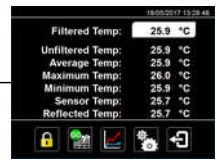

Unlock

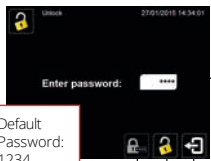

Default Password: 1234

Exit

Unlock

Change Password

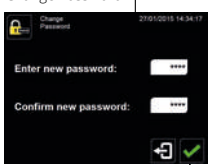

Apply (save and exit)

Settings



Graph

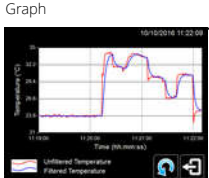

Clear graph

Output Range

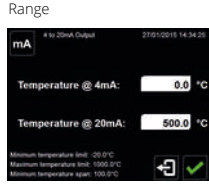

Data Logging

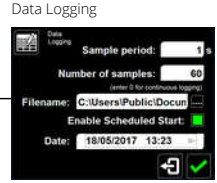

Output Processing

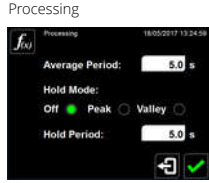

Emissivity & Compensation

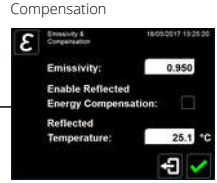

Issue Y - March 26

Calex Electronics Limited
PO Box 2, Leighton Buzzard, Bedfordshire, England LU7 4AZ
Tel: +44 (0)1525 373178 | mail@calex.co.uk | www.calex.co.uk