U.49P8 | U.49P - CLAMPS FOR INSIDE GRIP



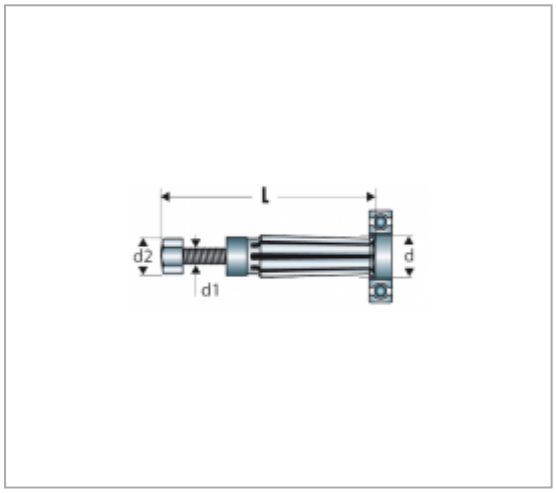

Description :

• High impact and screwing / unscrewing resistance. • Multiple flexible blades and hardly sensitive to distortion. • Easy to use.

Informations :

	U.49P8
d mini [mm]	38
d maxi [mm]	50
d mini - maxi [mm]	38,0 - 50,0
d1 [mm]	1/2"
d2 [mm]	1-1/4"
L maxi [mm]	190
L [mm]	190
[g]	1200

© FACOM 2019