IE5364

Inductive sensor

IEG3002BBPKG/V2A/0.35M/US-100/ANGLED

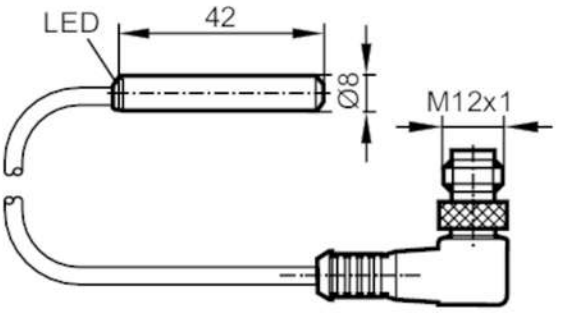

CE

Product characteristics		
Electrical design		PNP
Output function		normally open
Sensing range	[mm]	2
Housing		cylindrical
Dimensions	[mm]	Ø 8 / L = 42
Application		
Special feature		Increased sensing range
Electrical data		
Operating voltage	[V]	10...36 DC
Current consumption	[mA]	< 15
Protection class		III
Reverse polarity protection		yes
Outputs		
Electrical design		PNP
Output function		normally open
Max. voltage drop switching output DC	[V]	2.5
Permanent current rating of switching output DC	[mA]	200
Switching frequency DC	[Hz]	1000
Short-circuit protection		yes
Overload protection		yes
Detection zone		
Sensing range	[mm]	2
Real sensing range Sr	[mm]	2 ± 10 %
Operating distance	[mm]	0...1.6
Increased sensing range		yes
Accuracy / deviations		
Correction factor		steel: 1 / stainless steel: 0.7 / brass: 0.5 / aluminium: 0.4 / copper: 0.3
Hysteresis	[% of Sr]	1...10
Switch point drift	[% of Sr]	-10...10

IE5364

Inductive sensor

IEG3002BBPKG/V2A/0.35M/US-100/ANGLED

Operating conditions			
Ambient temperature	[°C]	-25...70	
Protection		IP 67	
Tests / approvals			
EMC		EN 61000-4-2 ESD	4 kV CD / 8 kV AD
		EN 61000-4-3 HF radiated	3 V/m
		EN 61000-4-4 Burst	2 kV
		EN 61000-4-6 HF conducted	3 V
		EN 55011	class B
MTTF	[years]	2791	
Mechanical data			
Weight	[g]	50.5	
Housing		cylindrical	
Mounting		flush mountable	
Dimensions	[mm]	Ø 8 / L = 42	
Materials		LCP black; stainless steel (1.4305 / 303)	
Displays / operating elements			
Display		switching status	1 x LED, yellow
Remarks			
Pack quantity		1 pcs.	
Electrical connection - plug			

Cable: 0.35 m, PVC; 3 x 0.14 mm²

Connector: 1 x M12, angled; coding: A



Connection

