IM9201

Inductive sensor

IME2020-ARKG/UP RT

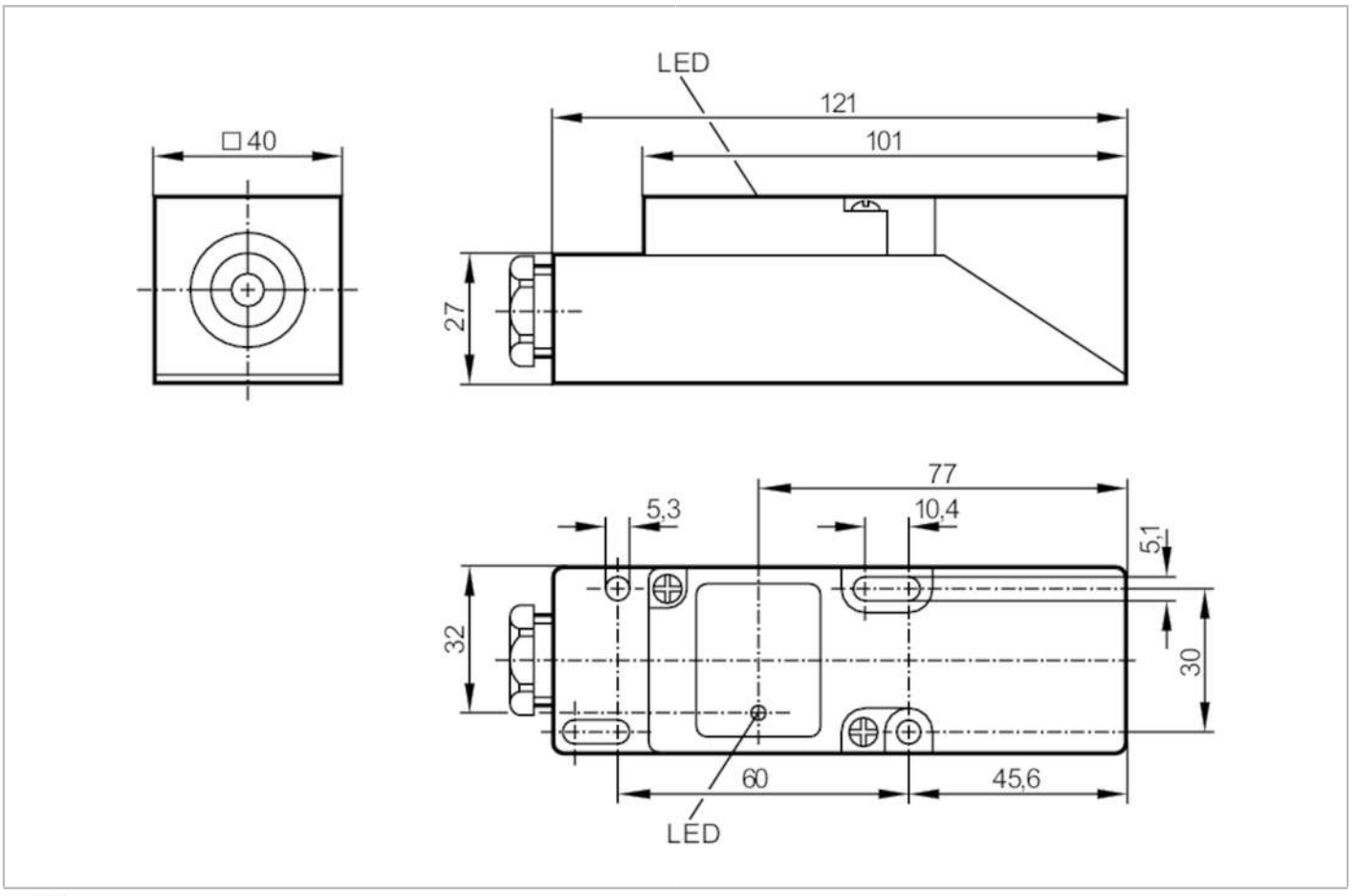

Product characteristics		
Electrical design		PNP/NPN
Output function		normally open
Sensing range	[mm]	20
Housing		rectangular
Dimensions	[mm]	40 x 40 x 120
Electrical data		
Operating voltage	[V]	10...55 DC
Protection class		II
Reverse polarity protection		yes
Outputs		
Electrical design		PNP/NPN
Output function		normally open
Max. voltage drop switching output DC	[V]	4.6
Minimum load current	[mA]	4
Max. leakage current	[mA]	1
Permanent current rating of switching output DC	[mA]	400
Switching frequency DC	[Hz]	300

IM9201

Inductive sensor

IME2020-ARKG/UP RT

Short-circuit protection		yes	
Type of short-circuit protection		pulsed	
Overload protection		yes	
Detection zone			
Sensing range	[mm]	20	
Real sensing range Sr	[mm]	20 ± 10 %	
Operating distance	[mm]	0...16.2	
Accuracy / deviations			
Correction factor		steel: 1 / stainless steel: 0.7 / brass: 0.4 / aluminium: 0.3 / copper: 0.2	
Hysteresis	[% of Sr]	1...15	
Switch point drift	[% of Sr]	-10...10	
Operating conditions			
Ambient temperature	[°C]	-25...80	
Protection		IP 65	
Tests / approvals			
EMC		EN 60947-5-2	
		EN 55011	class B
MTTF	[years]	1657	
Mechanical data			
Weight	[g]	181	
Housing		rectangular	
Mounting		non-flush mountable	
Dimensions	[mm]	40 x 40 x 120	
Materials		PPE modified	
Displays / operating elements			
Display		switching status	1 x LED, yellow
Remarks			
Remarks		5 positions of the active zone possible	
Pack quantity		1 pcs.	

IM9201

Inductive sensor

IME2020-ARKG/UP **RT**

Electrical connection

terminals: ...2.5 mm²; Cable sheath: Ø 7...13 mm; Cable gland: M20 X 1.5

Connection

