Midi Horns and Sirens / Electronic Siren 123

Electr. Siren WM alternating 12VDC BK



Part No.: 123.100.54

MECHANICAL DATA	
Length	67 mm
Width	54 mm
Height	67 mm
Diameter	54 mm
Materials	ABS
Housing colour	Black
Protection category	IP54
Connection	Cable
cross-sectional area maximum	0,50mm² / 20AWG
Type of fixing	Wall mounting
Working temperature minimum	-30°C
Working temperature maximum	+70°C
Weight with packaging	97 g
Product weight	81 g

ELECTRICAL DATA	
Operating voltage	12V
Operating voltage type	DC
Operating voltage tolerance	+/- 10%
Rated operational voltage	12 VDC
Rated operational current	100 mA
Rated inrush current	3.000 mA
Protection class	Protection class 3
Pollution degree	3
Request to external PSU	SELV/PELV

ACUSTICAL DATA	
Volume (max) at 1m distance	105,0 dB (A)
Acoustic signal image	Alternating tone
Acoustic service life	1,000 h minimum

APPROVAL DATA	
Conforms with CE	Yes
WEEE	Yes
Conforms with ATEX-directive	No
Conforms with CCC	No
Conforms with UL	No
Conforms with FCC	No
Conforms with IC	No

! For additional installation and mounting information, refer to the appropriate user guide at www.werma.com. This printed copy is for information only and is subject to alteration.

Midi Horns and Sirens / Electronic Siren 123

Electr. Siren WM alternating 12VDC BK

EAC certificate available	Yes
Conforms with UKCA (Importer)	Yes (WERMA (UK) Ltd.)
Conforms with AS-I	No
ICAO Certification	No
Conforms with DNV	No
Conforms with RoHS CN	No
Conforms with VdS	No

DRAWING

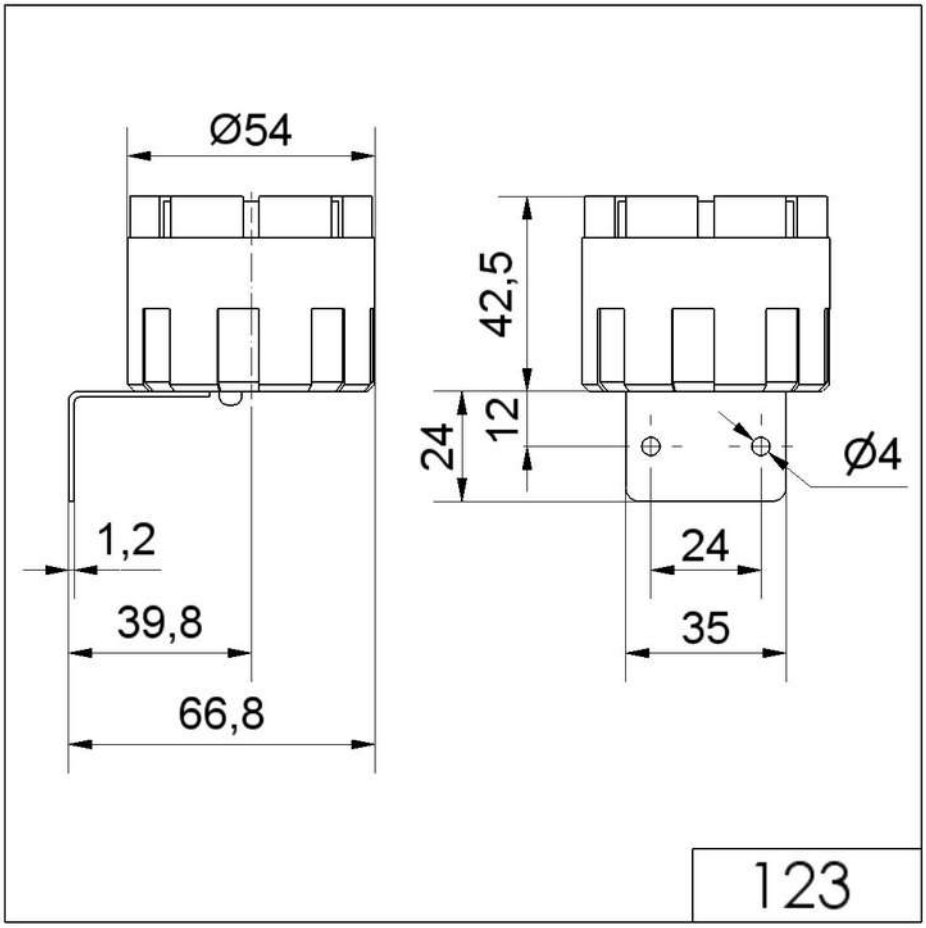

! For additional installation and mounting information, refer to the appropriate user guide at www.werma.com. This printed copy is for information only and is subject to alteration.