21101-714 FRONT PANEL EMC STAINLESS STEEL SHIELDING KIT, 4 U, 100 PIECES

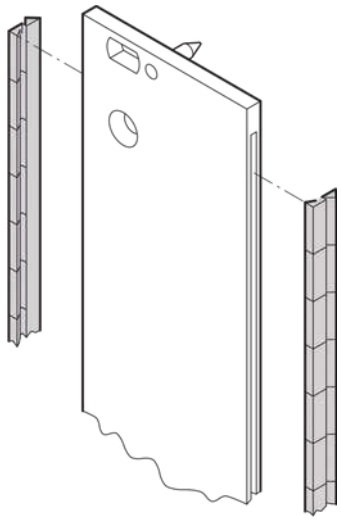

KEY FEATURES

- The stainless steel EMC gaskets are inserted into the lateral slots of the shieldable front panels (2-pieces per front panel)
- EMC contact strip, stainless steel
- Temperature range -200 °C ... +160 °C

PRODUCT ATTRIBUTES

- Product Type: Shielding Kit
- Product Family: EuropacPRO; RatiopacPRO; RatiopacPRO AIR; PropacPRO; Frame Type Plug-In Unit
- Rack Height: 4 U
- Package Quantity: 100

ADDITIONAL PRODUCT DETAILS

The stainless steel EMC gaskets are inserted into the lateral slots of the shieldable front panels (2-pieces per front panel).

Please order assembly tool separately.

CERTIFICATIONS

RoHS COMPLIANT

North America
All locations
+1.763.422.2661
Chat with us:
schroff.nvent.com

Europe
Straubenhardt, Germany
+49.7082.794.0
Betschdorf, France
+33.3.88.90.64.90
Warsaw, Poland
+48.22.209.98.35
Assago, Italy
+39.02.932.7141
Chat with us:
schroff.nvent.com

Asia
Shanghai, China
+86.21.2412.6943
Qingdao, China
+86.532.8771.6101
Singapore
+65.6768.5800
Shin-Yokohama, Japan
+81.45.476.0271
Chat with us:
schroff.nvent.com

Middle East & India
Dubai, United Arab Emirates
+971.4.378.1700
Bangalore, India
+91.80.6715.2001
Istanbul, Turkey
+90.216.250.7374
Chat with us:
schroff.nvent.com

nVent

Our powerful portfolio of brands:
nVent.com **CADDY ERICO HOFFMAN RAYCHEM SCHROFF TRACER**

© 2023 nVent. All nVent marks and logos are owned or licensed by nVent Services GmbH or its affiliates. All other trademarks are the property of their respective owners.

nVent reserves the right to change specifications without notice.