Directional valves → Electrically operated

5/2-way valve, Series 740

► Qn = 700 - 950 l/min ► pipe connection ► compressed air connection output: Ø 8x1 - Ø 10x1 ► Electr. connection: Plug, EN 175301-803, form A ► with throttle ► Can be assembled into blocks ► Manual override: with detent, without detent



00134324

Version	Diaphragm poppet valve
Pilot	internal
Sealing principle	soft sealing
Blocking principle	Plate principle, Single base plate principle
Mounting on manifold strip	PRS strip
Working pressure min./max.	1.5 bar / 10 bar
Ambient temperature min./max.	-15°C / +50°C
Medium temperature min./max.	-15°C / +50°C
Medium	Compressed air
Max. particle size	50 μm
Oil content of compressed air	0 mg/m³ - 5 mg/m³
Connector standard	EN 175301-803:2006
Protection class according to EN 60529:2000 with electrical connector/plug	IP 65
Compatibility index	14
Duty cycle	100 %
Switch-on time	16 ms
Switch-off time	36 ms
Materials:	
Housing	Polyoxymethylene; Polyarylamide
Seals	Acrylonitrile Butadiene Rubber

Technical Remarks

- The pressure dew point must be at least 15 °C under ambient and medium temperature and may not exceed 3 °C.
- The oil content of air pressure must remain constant during the life cycle.
- Use only the approved oils from Bosch Rexroth, see chapter „Technical information“.
- ATEX optional: ATEX version can be produced by combining the basic valve without coil with an ATEX coil. ATEX ID: see ATEX coils catalog page.

Operating voltage			Voltage tolerance			Power consumption	Switch-on power		Holding power	
DC	AC 50 Hz	AC 60 Hz	DC	AC 50 Hz	AC 60 Hz	DC	AC 50 Hz	AC 60 Hz	AC 50 Hz	AC 60 Hz
						W	VA	VA	VA	VA
24 V	-	-	-10% / +10%	-	-	2.1	-	-	-	-
-	230 V	230 V	-	-20% / +10%	-10% / +20%	2.1	6.6	5.5	4.18	3.3
-	-	-	-	-	-	2.1	-	-	-	-

Directional valves → Electrically operated

5/2-way valve, Series 740

► Qn = 700 - 950 l/min ► pipe connection ► compressed air connection output: Ø 8x1 - Ø 10x1 ► Electr. connection: Plug, EN 175301-803, form A ► with throttle ► Can be assembled into blocks ► Manual override: with detent, without detent

	MO	Compressed air connection			Operating voltage			Flow rate value	Weight	Note	Part No.
		Input	Output	Exhaust	DC	AC 50 Hz	AC 60 Hz	Qn			
								[l/min]	[kg]		
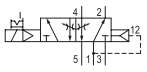		Ø 8x1	Ø 8x1		24 V	-	-	700	0.339	1); 4)	**5727400220**
		Ø 8x1	Ø 8x1		24 V	-	-	700	0.317	2); 4)	**5727400420**
		Ø 8x1	Ø 8x1		24 V	-	-	700	0.335	1); 4); 6)	**5727420220**
		Ø 10x1	Ø 10x1	M14x1	24 V	-	-	950	0.341	1); 4)	**5727450220**
		Ø 10x1	Ø 10x1		24 V	-	-	950	0.318	2); 4)	**5727450420**
		Ø 8x1	Ø 8x1		-	230 V	230 V	700	0.335	1); 4)	**5727405280**
		Ø 8x1	Ø 8x1		-	230 V	230 V	700	0.311	2); 4)	**5727405480**
		Ø 10x1	Ø 10x1		-	230 V	230 V	950	0.336	1); 4)	**5727455280**
		Ø 10x1	Ø 10x1		-	230 V	230 V	950	0.311	2); 4)	**5727455480**
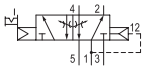		Ø 8x1	Ø 8x1	M14x1	-	-	-	700	0.221	3); 5)	**5727405302**
		Ø 10x1	Ø 10x1					950	0.22		**5727455302**

MO = Manual override
1) with electrical connector
2) without electrical connector
3) Basic valve without coil
4) Protected against polarity reversal
5) ATEX optional
6) ATEX certified: II 3G3D EEX nA IIB T4 IP65 T125 °C X
Nominal flow Qn at 6 bar and Δp = 1 bar

5/2-way valve, Series 740

► Qn = 700 - 950 l/min ► pipe connection ► compressed air connection output: Ø 8x1 - Ø 10x1 ► Electr. connection: Plug, EN 175301-803, form A ► with throttle ► Can be assembled into blocks ► Manual override: with detent, without detent

Dimensions

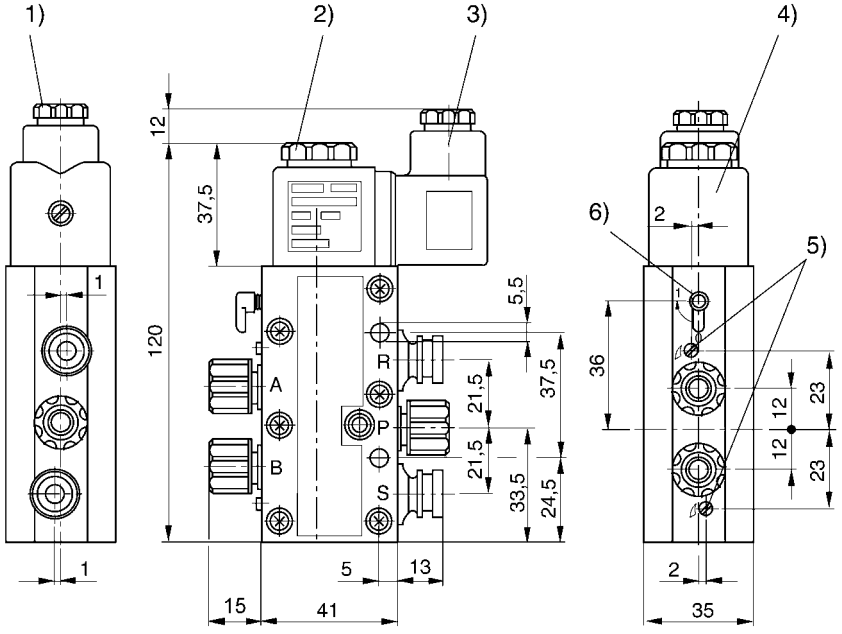

Fig. 1

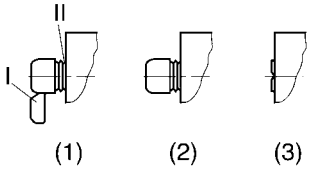

1) gland fitting M16x1,5
2) M5 internal thread accessible under cap
3) el. connector can be rotated at 90° intervals
4) coil can be plugged at 45° intervals
5) throttle screw for exhausts 5 (R) and 3 (S) (S)
6) manual override and position indicator

Fig. 1: manual override:
manual actuation: (1) with detent - push and turn into position 1 (2) without detent - remove segment 1 - push only
actuation by tool: (3) with detent - remove segments up to II - push with tool and turn into position 1