Hour meters / timers, electronic

LED timers | h, min, sec or hh.mm.ss (DC) | Codix 523



The Codix 523 is an externally powered timer, hour meter or short-time meter with 4 start input types and individually adjustable time base.

The 6-digit LED display shows the NPN, PNP input signals used for pulse width or time interval measurement.



Powerful

- High accuracy thanks to quartz time base.
- Robust housing – IP65 protected.
- Very bright LED display, 8 mm high.
- Time base can be set individually
  - hours, minutes or seconds, the decimal point allows setting it even more accurately, up to max. 3 decimal places.
  - smallest achievable resolution: milliseconds.
  - time base hours (minutes and seconds as real-time display).
- Short start-up time – detects incoming pulses already 16 ms after having been switched on => no loss of pulses in case of a simultaneous motor start.
- Individually adjustable Start/Stop function
  2 Start/Stop inputs allow achieving 4 different measuring principles such as, for example, active or passive pulse width measurement, time interval measurement with one single input or with separate inputs.

User-friendly and universal

- Large keys – pressing either of the keys switches between displays (can also be operated wearing gloves).
- Programming
  - simple uniform menu-driven programming and operation.
  - possibility to enter the programming mode also during operation with an authentication query.
- Manual or electrical reset
  Tamper-proof thanks to lockable reset function.
- Freely programmable setpoint
  Start time at which time counting begins.
- As an alternative to the HTL inputs, devices with a 4 ... 30 V DC input level are available, for use as parallel displays for PLCs.
- Optional output: 1 Hz clock pulse in case of active time measurement.

Order code

6.523	.	01	X (a)	.	3	X (b)	0

(a) *Output*
1 = Optocoupler
2 = No output [1)]

(b) *Input switch level*
0 = Standard (HTL) [1)]
A = 4 ... 30 V DC

Delivery specification
- Timer
- Mounting clip
- Gasket
- Instruction manual, multilingual
- Front bezel for screw mounting (T008181) 56 x 40 mm [2.20 x 1.57"], panel cut-out 50 x 25 mm [1.97 x 0.98"]
- Front bezel for clip mounting (T008180) 53 x 28 mm [2.09 x 1.10"], panel cut-out 50 x 25 mm [1.97 x 0.98"]

1) Stock types

© Fritz Kübler GmbH, subject to errors and changes. 03/2023

LED timers | h, min, sec or hh.mm.ss (DC) | Codix 523

Accessories / Mounting examples

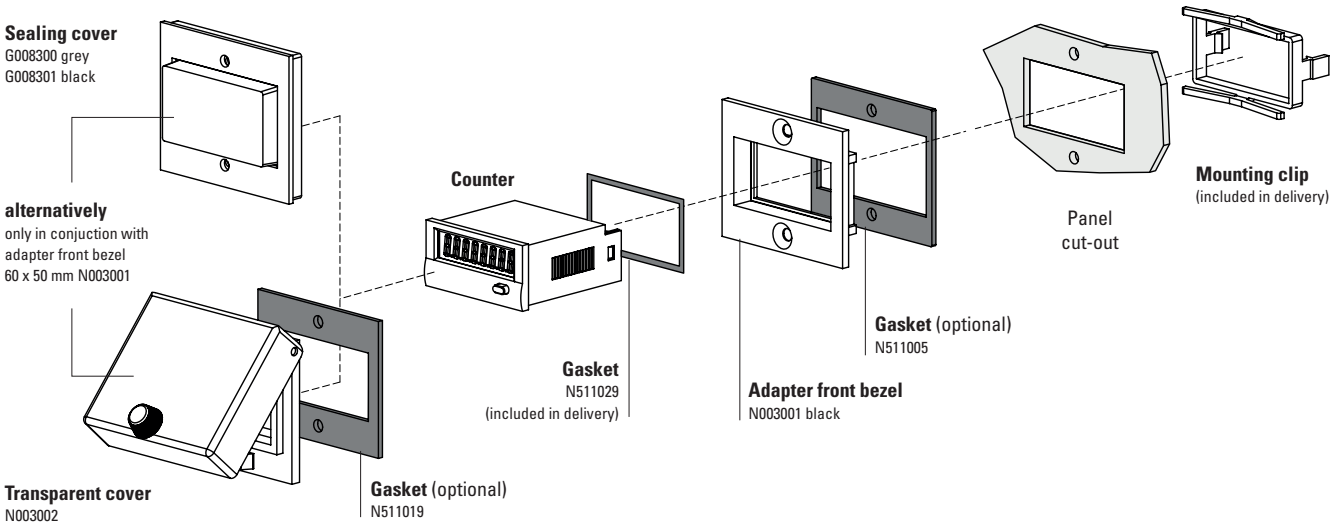

		Type / size	Description		Order no.	suitable gasket
Adapter front bezel		**53 x 28 mm [2.09 x 1.10“]**	for cut-out 50 x 25 mm [1.97 x 0.98“] to cut-out 45 x 22.2 mm [1.77 x 0.94“]	grey black anthracite	**T008164** **T008165** **T008180**	**N511015**
		**56 x 40 mm [2.20 x 1.57“]**	for cut-out 50 x 25 mm [1.97 x 0.98“] to cut-out 45 x 22.2 mm [1.77 x 0.94“] screw mounting	black anthracite	**T008161** **T008181**	**N511045**
		**72 x 36 mm [2.83 x 1.42“]**	for cut-out 68 x 33 mm [2.68 x 1.30“] to cut-out 45 x 22.2 mm [1.77 x 0.94“]	black and silver anodised as set	**162704Set**	–
		**60 x 50 mm [2.36 x 1.97“]**	for cut-out 54 x 29 mm [2.13 x 1.14“] to cut-out 45 x 22.2 mm [1.77 x 0.94“] screw mounting	black	**N003001**	**N511005**
		**48 x 48 mm [1.89 x 1.89“]**	for cut-out 45 x 45 mm [1.77 x 1.77“] to cut-out 45 x 22.2 mm [1.77 x 0.94“]	black	**T008883**	–
Sealing cover IP65		**K1**	only in conjuction with adapter front bezel 60 x 50 mm N003001	transparent / grey transparent / black	**G008300** **G008301**	–
Transparent cover IP65		**1 Dv** (mounted on bezel)	cover lockable, for cut-out 54 x 29 mm [2.13 x 1.14“], only in conjuction with adapter front bezel 60 x 50 mm N003001	transparent / black	**N003002**	**N511019**
Gasket counter			48 x 24 mm (for installation in adapter front bezel) 49 x 25 mm		**N511029** **N511034**	
Mounting frame		**cut-out 50 x 25 mm [1.97 x 0.98“]**	via adapter T008180 for snap-on mounting on 35 mm [1.38“] top-hat DIN rail	chromated	**G300004**	–
Enclosure blind		**48 x 24 mm [1.89 x 0.94“]**	for cut-out 45 x 22.2 mm [1.77 x 0.94“] and cut-out 50 x 25 mm [1.97 x 0.98“]	anthracite	**G003836**	–

incl. in delivery

© Fritz Kübler GmbH, subject to errors and changes. 03/2023

LED timers | h, min, sec or hh.mm.ss (DC) | Codix 523

Technical data

General technical data

Display		6 digits, red 7 segment LED display; 8 mm [0.31“] high
Data backup		EEPROM
Operating temperature	10 ... 26 V DC	-20 °C ... +65 °C [-4 °F ... +149 °F]
	> 26 ... 30 V DC	-20 °C ... +55 °C [-4 °F ... +131 °F] (non-condensing)
Storage temperature		-25 °C ... +70 °C [-13 °F ... +158 °F]

Electrical characteristics

Supply voltage	10 ... 30 V DC, with integrated reverse polarity protection
Current consumption	max. 55 mA

Mechanical characteristics

Housing	front panel mount 48 x 24 mm [1.89 x 0.94“] acc. to DIN 43700; RAL 7021, dark grey
Protection	IP65 (front side)
Weight	approx. 50 g [1.76 oz]
Vibration resistance acc. to EN 60068-2-6	10 ... 55 Hz / 1 mm [0.04“] / 30 min
Shock resistance acc. to EN 60068-2-27	100 G: 2 ms 10 G: 6 ms

Inputs

Polarity of inputs		programmable, NPN or PNP for all inputs
Input resistance		approx. 5 kΩ
Resolution		up to 0.001 s
Minimum pulse duration of the reset input		5 ms
Input switching level standard version (HTL)	LOW	0 ... 0.2 x U_B [V DC]
	HIGH	0.6 x U_B ... 30 V DC
Input switching level at 4 ... 30 V DC	LOW	0 ... 2 V DC
	HIGH	4 ... 30 V DC
Accuracy		< 50 ppm

Outputs (optional)

Output power optocoupler	max. 30 V, 10 mA

Approvals

UL compliant in accordance with	File no. E128604
CE compliant in accordance with	
EMC Directive	2014/30/EU
RoHS Directive	2011/65/EU
UKCA compliant in accordance with	
EMC Regulations	S.I. 2016/1091
RoHS Regulations	S.I. 2012/3032

Applications for time and hour meters, short-time meters

- Time measurements such as hours run recording on all machines and plant, e.g. compressors, solariums, special lights and lamps
- Accessories, OEM equipment or retrofitting to production machine
- Measurement of short times on processes and procedures, time recording (stopwatch function) at sporting events
- Hours run recording for motor vehicles and time monitoring for rally vehicles

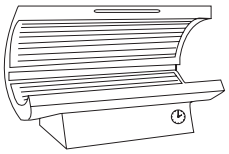

Hours run of UV lamps

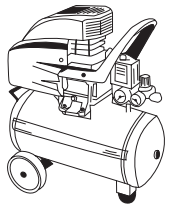

Operating hours

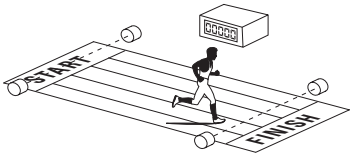

Short time measurement > 1 ms

© Fritz Kübler GmbH, subject to errors and changes. 03/2023

LED timers | h, min, sec or hh.mm.ss (DC) | Codix 523

Block diagram

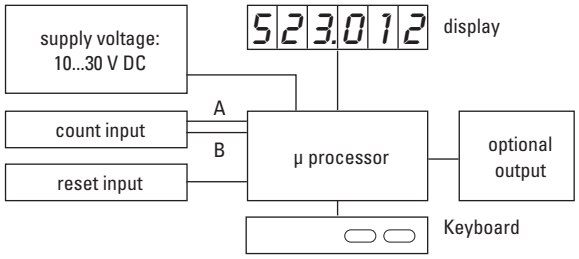

Terminal assignment



PIN	without optocoupler
1	10 ... 30 V DC
2	0 V GND
3	INP A
4	INP B
5	reset



PIN	with optocoupler (NPN)
1	10 ... 30 V DC
2	0 V GND
3	INP A
4	INP B
5	reset
6	emitter
7	collector

Dimensions

Dimensions in mm [inch]

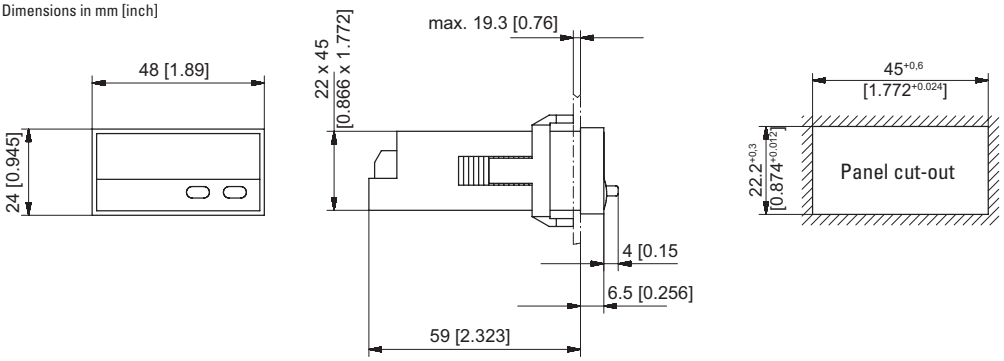

Front bezel for clip mounting (included in delivery)

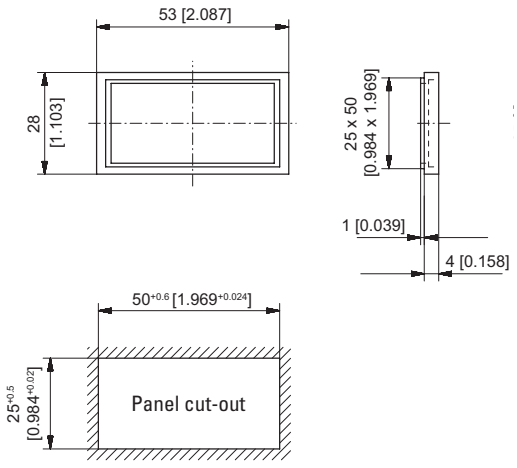

Front bezel for screw mounting (included in delivery)

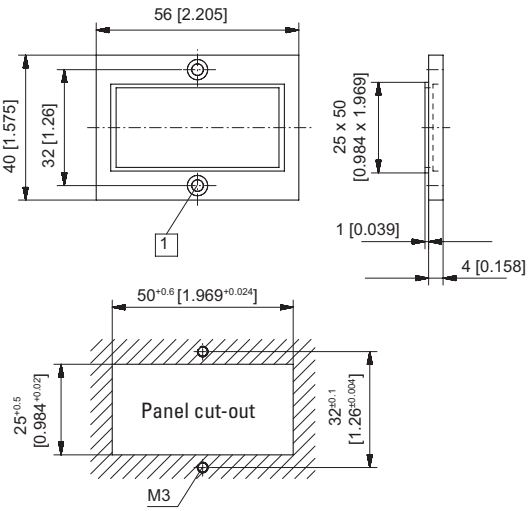

1 Countersinking Af3, DIN 74

© Fritz Kübler GmbH, subject to errors and changes. 03/2023