datasheet for PRUEF 2610 FT
article number: 972318100



SKS Kontakttechnik GmbH

product description:	order number: 972 318-100
description:	Test probe with insulating sleeve and slender, sprung stainless steel tip. This allows a constant pressure to be applied without the tip slipping off the component, even in the smallest measuring points. 4 mm diameter brass socket connection. component part: protector and IC - tap SS 260
typ:	PRUEF 2610 FT schwarz/black
system:	4mm safty systems
order number:	972 318-100
color	●
other color versions:	●●
technical data	
measurement category	CAT II
norm	DIN EN 61010-031
pin dimensions	0,75mm
type of contact:	to touch with spring-mounted spike
type of termination:	4mm socket, unsprung
rated voltage:	AC/DC 1000 V
rated current:	1A
contact resistance:	50mOhm
material	
contact material:	stainless steel
contact surface material:	rhodium
housing material:	PP
environmental conditions:	
temperature range:	-25 ºC to +80 ºC
inflammable class:	
housing:	94 HB
drawing	

Copyright ©2011 SKS-Kontakttechnik GmbH - printed: Tue Mar 8 2011 8:50:55

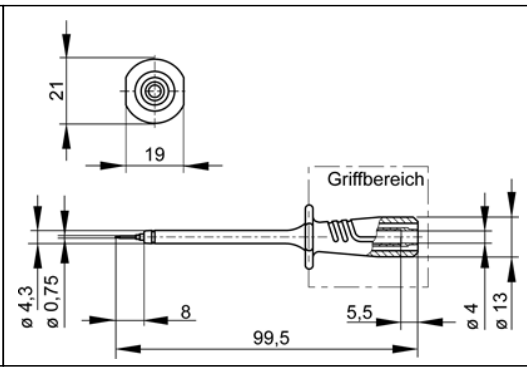

Copyright ©2011 SKS-Kontakttechnik GmbH - printed: Tue Mar 8 2011 8:50:55

datasheet for PRUEF 2610 FT
article number: 972318101



SKS Kontakttechnik GmbH

product description:	order number: 972 318-101
description:	Test probe with insulating sleeve and slender, sprung stainless steel tip. This allows a constant pressure to be applied without the tip slipping off the component, even in the smallest measuring points. 4 mm diameter brass socket connection. component part: protector and IC - tap SS 260
typ:	PRUEF 2610 FT rot/red
system:	4mm safety system
order number:	972 318-101
color	
other color versions:	
technical data	
measurement category	CAT II
norm	DIN EN 61010-031
pin dimensions	0,75mm
type of contact:	to touch with spring-mounted spike
type of termination:	4mm socket, unspung
rated voltage:	AC/DC 1000 V
rated current:	1A
contact resistance:	50mOhm
material	
contact material:	stainless steel
contact surface material:	rhodium
housing material:	PP
environmental conditions:	
temperature range:	-25 ºC to +80 ºC
inflammable class:	
housing:	94 HB
drawing	

Copyright ©2011 SKS-Kontakttechnik GmbH - printed: Tue Mar 8 2011 8:51:50

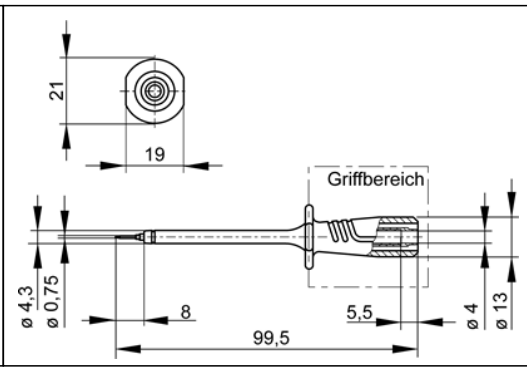

Copyright ©2011 SKS-Kontakttechnik GmbH - printed: Tue Mar 8 2011 8:51:50