O5H504

Diffuse reflection sensor with background suppression

O5H-FNKG/US100

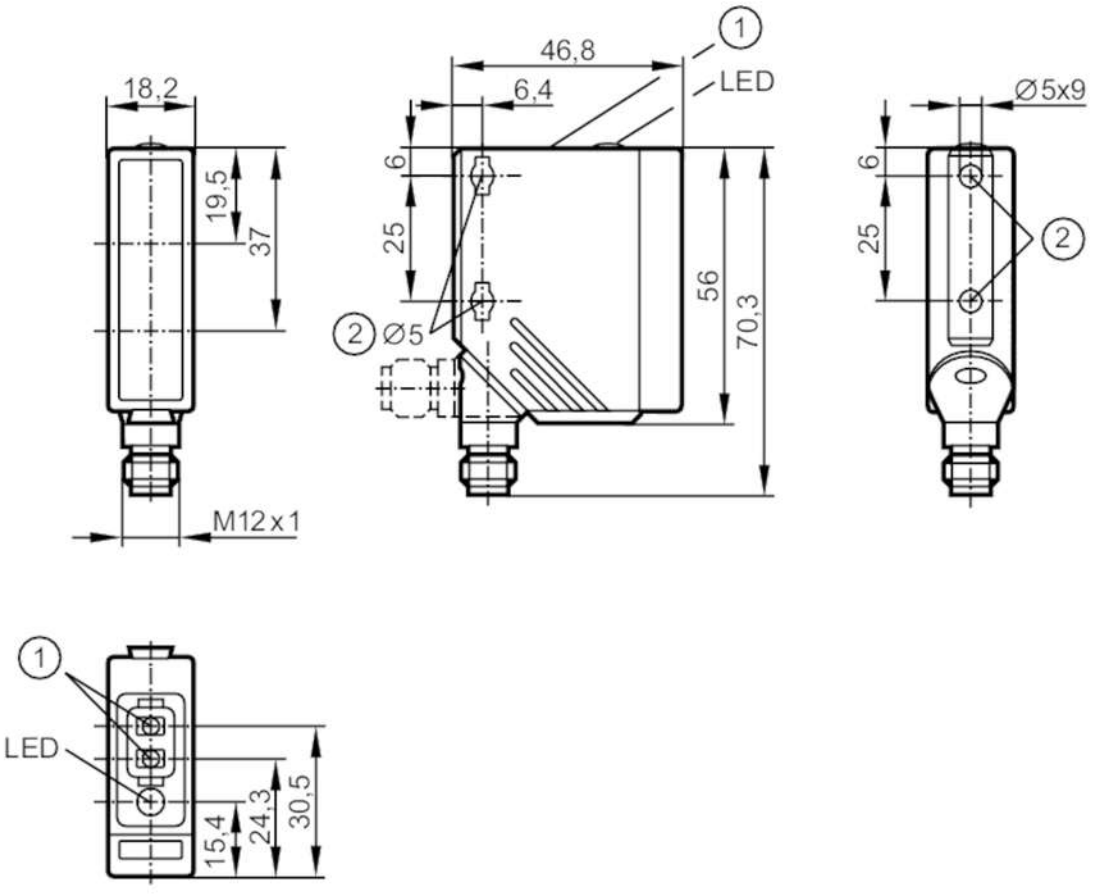

1 programming buttons
2 When a M5 mounting screw is used, the max. tightening torque is 2 Nm.

Product characteristics		
Type of light		red light
Housing		rectangular
Application		
Special feature		Background suppression
Function principle		Diffuse reflection sensor
Electrical data		
Operating voltage	[V]	10...36 DC
Current consumption	[mA]	25
Protection class		II
Reverse polarity protection		yes
Type of light		red light
Wave length	[nm]	624
Outputs		
Electrical design		NPN
Output function		light-on/dark-on mode; (programmable)
Max. voltage drop switching output DC	[V]	2.5

O5H504

Diffuse reflection sensor with background suppression

O5H-FNKG/US100

Permanent current rating of switching output DC [mA]		200
Switching frequency DC [Hz]		1000
Short-circuit protection		yes
Type of short-circuit protection		pulsed
Overload protection		yes
Detection zone		
Range [mm]		50...1800; (white paper 200 x 200 mm 90% remission)
Range on white object (90 % remission) [mm]		50...1800
Range on grey object (18 % remission) [mm]		50...900
Range on black object (6 % remission) [mm]		50...600
Range adjustable		yes
Max. light spot diameter [mm]		50
Light spot dimensions refer to		Range
Background suppression available		yes
Operating conditions		
Ambient temperature [°C]		-25...60
Protection		IP 67
Tests / approvals		
EMC	EN 60947-5-2	
MTTF [years]		341
Mechanical data		
Weight [g]		67.5
Housing		rectangular
Dimensions [mm]		56 x 18.2 x 46.8
Materials		housing: PA; bezel: stainless steel; operator interface: TPU
Lens material		PMMA
Lens alignment		side lens
Displays / operating elements		
Display	switching status	1 x LED, yellow
Teach function		yes
Electronic lock		yes
Remarks		
Remarks		operating voltage "supply class 2" according to cULus
Pack quantity		1 pcs.

O5H504

Diffuse reflection sensor with background suppression

O5H-FNKG/US100

Electrical connection

Connector: 1 x M12; coding: A

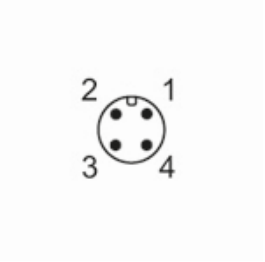

Connection

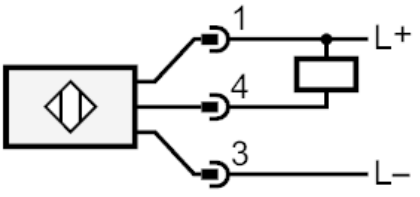

Diagrams and graphs

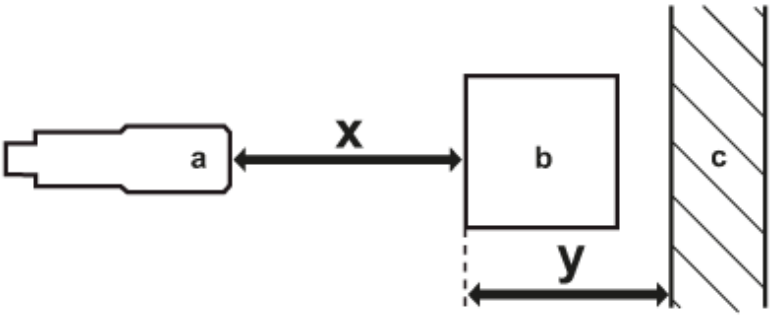

a: sensor

b: object

c: background

x: distance sensor/object [mm]

y: min. distance object/background [mm]

O5H504

Diffuse reflection sensor with background suppression

O5H-FNKG/US100

accuracy graph

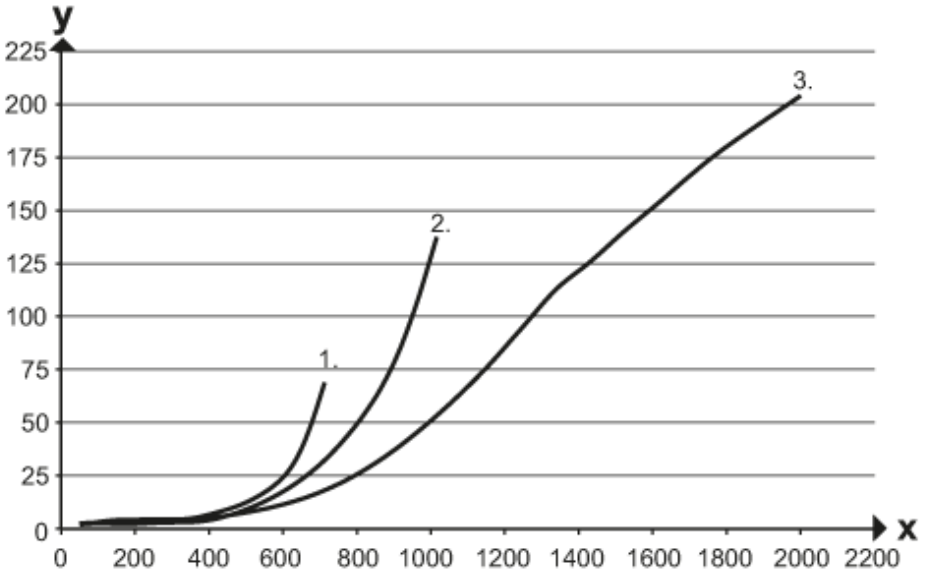

x: distance sensor/object [mm]

y: min. distance object/background [mm]

1 = object black (6 % remission) , background white (90 % remission)

2 = object grey (18 % remission) , background white (90 % remission)

3 = object white (90 % remission) , background white (90 % remission)