Rittal – The System.

Faster – better – everywhere.

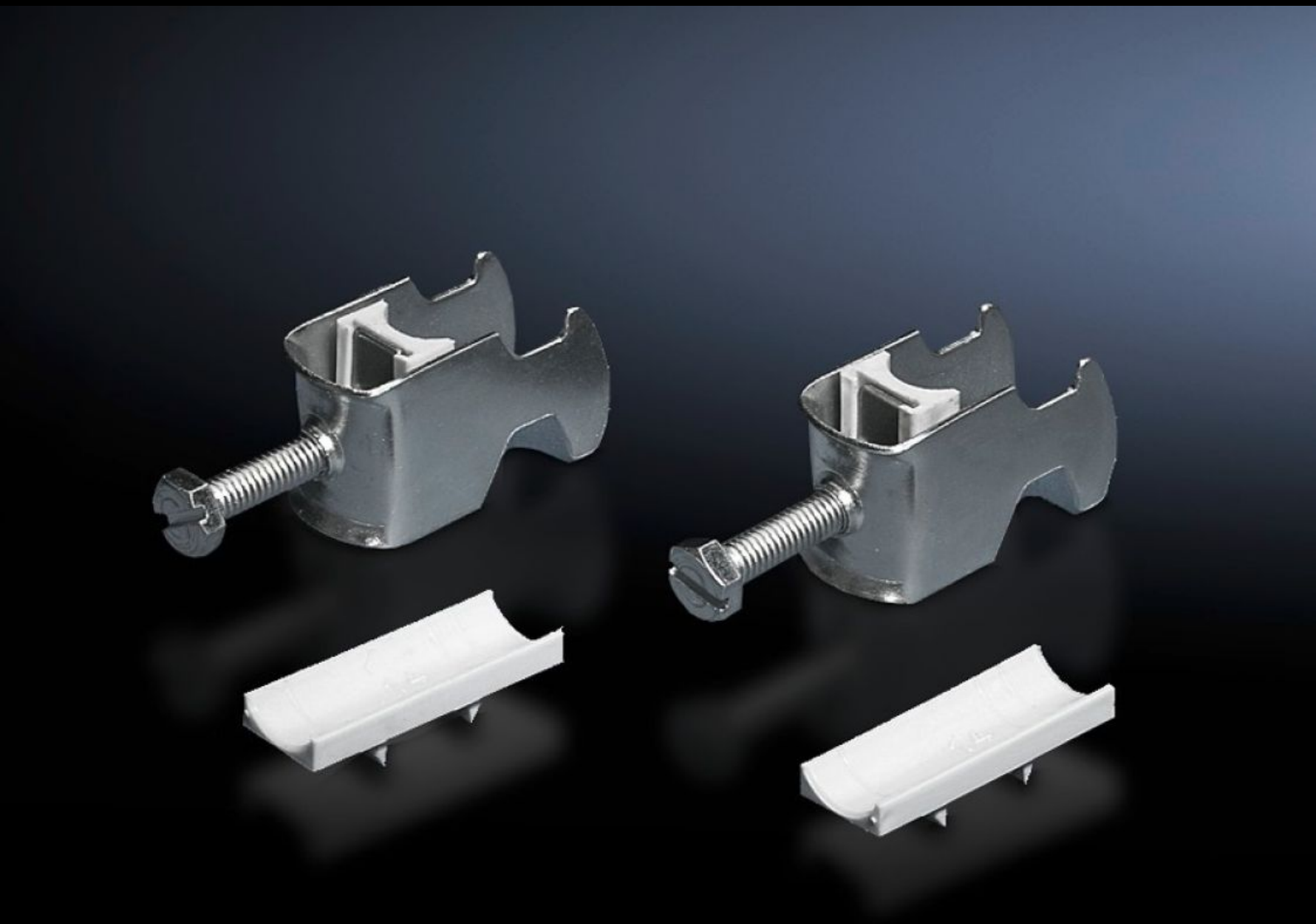

DK 7099.000

Cable clip

State: 1/2/2023 (Source: rittal.com/in-en)

DK 7099.000 - Cable clip for C rail, combination rail

For attaching cables to the C rail.

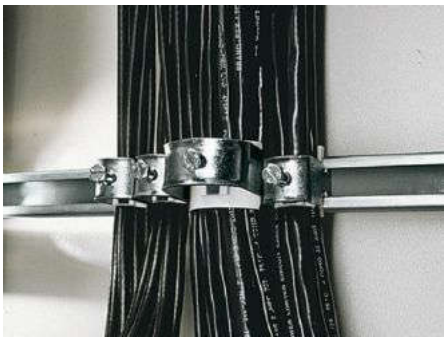

Features

Model No.	DK 7099.000
Design	for cable diameter 56 – 64 mm
Product description	For attaching cables to the C rail.
Material	Sheet steel
Surface finish	Zinc-plated
Supply includes	Plastic insert
Min. cable diameter	56 mm
Max. cable diameter	64 mm
Packs of	25 pc(s).
Weight/pack	3.45 kg
Copper weight (kg per piece)	0
Customs tariff number	73269098
EAN	4028177124561
ETIM 7.0	EC000454
ECLASS 8.0	23140202

© Rittal 2023

Approvals

Approvals	GOST

Tender text

Cable clamps 56 - 64 mm
For attaching cables to C rails. For cable diameter 56 - 64 mm.
Material: sheet steel, zinc-plated, passivated, with plastic insert.