OGE380

Through-beam sensor receiver

OGE-DPKG/US/V4A/CUBE

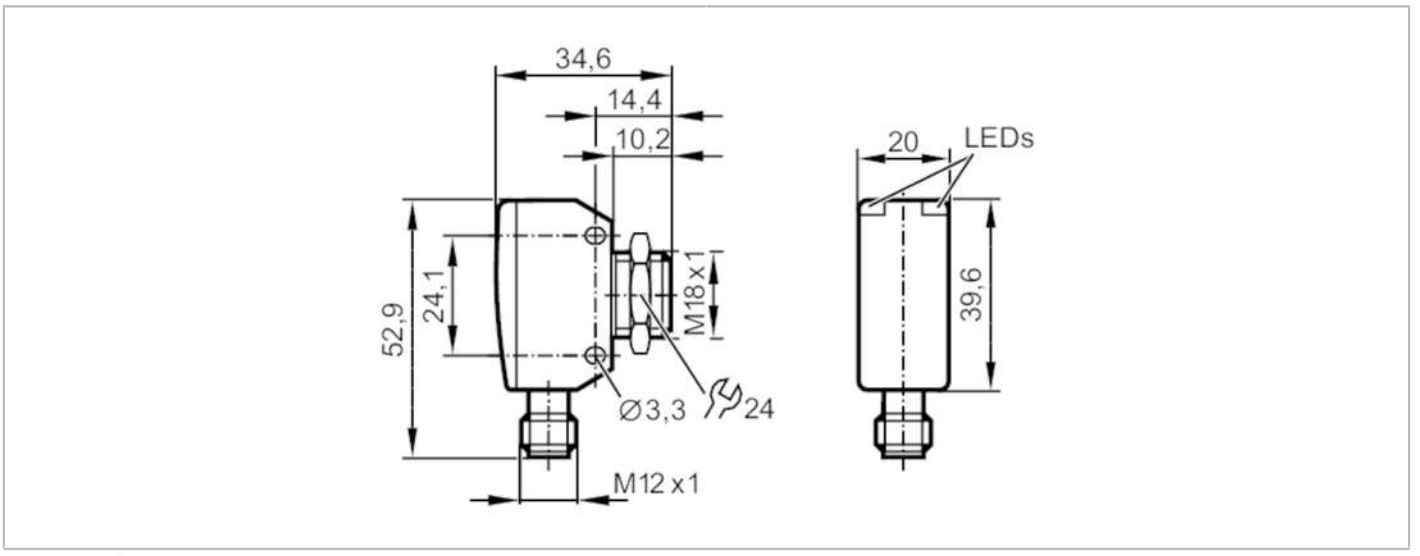

Product characteristics		
Type of light		red light
Housing		rectangular with M18 thread
Application		
Function principle		Through-beam sensor
Electrical data		
Operating voltage	[V]	10...30 DC
Rated insulation voltage	[V]	32
Current consumption	[mA]	16
Protection class		III
Reverse polarity protection		yes
Max. power-on delay time	[ms]	300
Type of light		red light
Wave length	[nm]	662
Outputs		
Electrical design		PNP
Output function		dark-on mode
Max. voltage drop switching output DC	[V]	2.5
Permanent current rating of switching output DC	[mA]	200
Switching frequency DC	[Hz]	1000
Short-circuit protection		yes
Type of short-circuit protection		pulsed
Detection zone		
Transmitter / receiver		receiver
Range	[m]	15
Range adjustable		no

OGE380

Through-beam sensor receiver

OGE-DPKG/US/V4A/CUBE

Interfaces			
Communication interface		IO-Link	
Transmission type		COM2 (38,4 kBaud)	
IO-Link revision		1.1	
SDCI standard		IEC 61131-9	
Profiles		Smart Sensor: Device Identification; Device Diagnosis; Teach Channel; Switching Channel	
SIO mode		yes	
Required master port type		A	
Min. process cycle time	[ms]	2.5	
IO-Link process data (cyclical)		**function**	**bit length**
		device status	4
		binary switching information	1
IO-Link functions (acyclical)		application specific tag; operating hours counter; switching cycles counter	
Supported DeviceIDs		**Type of operation**	**DeviceID**
		default	1130
Note		For further information please see the IODD PDF file under "Downloads"	
Operating conditions			
Ambient temperature	[°C]	-25...80	
Storage temperature	[°C]	-40...80	
Protection		IP 65; IP 67; IP 68; IP 69K	
Tests / approvals			
EMC		EN 60947-5-2	
MTTF	[years]	961	
UL approval		Ta	-25...80 °C
		Enclosure type	Type 1
		power supply	Class 2
		File number UL	E174191
Mechanical data			
Weight	[g]	78	
Housing		rectangular with M18 thread	
Dimensions	[mm]	52.9 x 20 x 34.6	
Thread designation		M18 x 1	
Materials		stainless steel (630/1.4542/17-4 PH); PEI	
Lens material		PEI	
Lens alignment		side lens	
Displays / operating elements			
Display		switching status	1 x LED, yellow
		operation	1 x LED, green
Accessories			
Items supplied		lock nut: 1	
Remarks			
Pack quantity		1 pcs.	

OGE380

Through-beam sensor receiver

OGE-DPKG/US/V4A/CUBE

Electrical connection

Connector: 1 x M12; coding: A

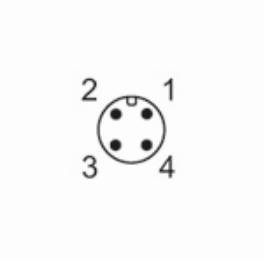

Connection

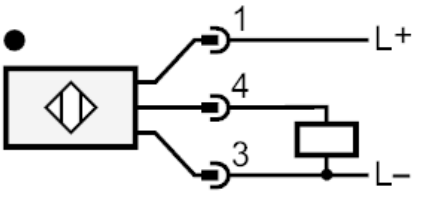

OGE380

Through-beam sensor receiver

OGE-DPKG/US/V4A/CUBE

Diagrams and graphs

excess gain graph

