E10210

Connecting cable with socket

ADOAA030MSS0005H03

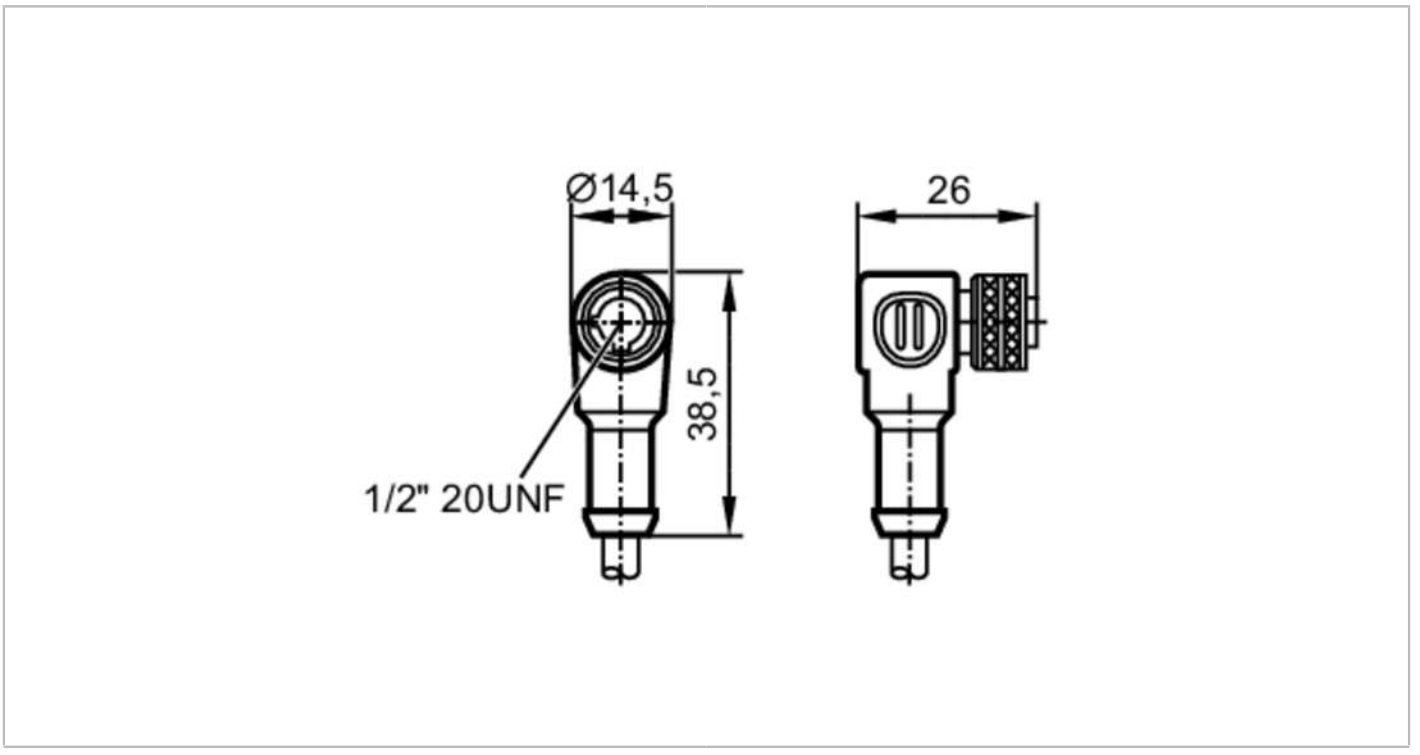

Application		
Special feature		Halogen-free; Drag chain suitability
Application		Industrial applications / factory automation
Electrical data		
Operating voltage	[V]	< 250 AC / < 300 DC
Operating conditions		
Ambient temperature	[°C]	-25...90
Protection		IP 67
Mechanical data		
Weight	[g]	204.8
Dimensions	[mm]	26 x 14.5 x 38.5
Moulded-body material		TPU
Material nut		brass, nickel-plated
Drag chain suitability		yes
Drag chain suitability	bending radius for flexible use	min. 10 x cable diameter
	travel speed	max. 3.3 m/s for a horizontal travel length of 5 m and max. acceleration of 5 m/s²
	bending cycles	> 2 Mio.
	torsional strain	± 180 °/m
Remarks		
Pack quantity		1 pcs.

E10210

Connecting cable with socket

ADOAA030MSS0005H03

Electrical connection

Cable: 5 m, PUR, Halogen-free, black, Ø 5.2 mm; 3 x 0.5 mm² (64 x Ø 0.1 mm)

Electrical connection - socket

Connector: 1 x 1/2", angled; coding: C; Moulded body: TPU, black; Locking: brass, nickel-plated; Tightening torque: ...0.6 Nm

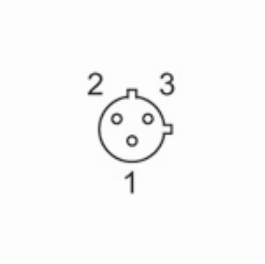

Connection

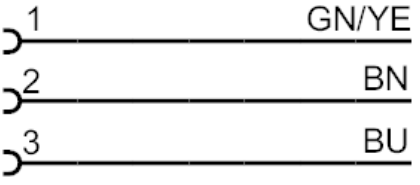

	Core colours :
BN =	brown
BU =	blue
GN/YE =	green/yellow