Technical data sheet
Polarized retro-reflective photoelectric sensor
Part no.: 50117924
PRK28/4P-M12



For Illustration purposes only

Contents

- Technical data
- Dimensioned drawings
- Electrical connection
- Diagrams
- Operation and display
- Reflectors & reflective tapes
- Part number code
- Notes
- Further information
- Accessories

Technical data

Basic data

Series	28
Operating principle	Reflection principle

Optical data

Operating range	0.02 ... 4.5 m, With reflector TK(S) 100x100
Operating range	Guaranteed operating range
Operating range limit	0.02 ... 6 m, With reflector TK(S) 100x100
Operating range limit	Typical operating range
Light source	LED, Red
Wavelength	620 nm
Transmitted-signal shape	Pulsed
LED group	Exempt group (in acc. with EN 62471)

Electrical data

Protective circuit	Polarity reversal protection
	Short circuit protected

Performance data

Supply voltage U_B	10 ... 30 V, DC, Incl. residual ripple
Residual ripple	0 ... 15 %, From U_B
Open-circuit current	0 ... 20 mA

Outputs

Number of digital switching outputs	2 Piece(s)

Switching outputs

Switching current, max.	100 mA
Switching voltage	high: ≥(U_B-2.5V)
	low: ≤ 2.5 V

Switching output 1

Switching element	Transistor, PNP
Switching principle	Light switching

Switching output 2

Switching element	Transistor, PNP
Switching principle	Dark switching

Time behavior

Switching frequency	500 Hz
Response time	1 ms
Readiness delay	300 ms

Connection

Connection 1

Function	Signal OUT
	Voltage supply
Type of connection	Connector
Thread size	M12
Material	Plastic
No. of pins	4 -pin
Encoding	A-coded

Mechanical data

Dimension (W x H x L)	15 mm x 46.5 mm x 31.8 mm
Thread size	M18
Housing material	Plastic
Plastic housing	ABS
Lens cover material	Plastic
Net weight	25 g
Housing color	Black
	Red

Operation and display

Type of display	LED
Number of LEDs	2 Piece(s)

Environmental data

Ambient temperature, operation	-40 ... 60 °C
Ambient temperature, storage	-40 ... 70 °C

Certifications

Degree of protection	IP 67
Protection class	III
Approvals	c UL US
Standards applied	IEC 60947-5-2

Classification

Customs tariff number	85365019
ECLASS 5.1.4	27270902
ECLASS 8.0	27270902
ECLASS 9.0	27270902
ECLASS 10.0	27270902
ECLASS 11.0	27270902
ECLASS 12.0	27270902
ECLASS 13.0	27270902
ECLASS 14.0	27270902
ECLASS 15.0	27270902
ETIM 5.0	EC002717
ETIM 6.0	EC002717
ETIM 7.0	EC002717
ETIM 8.0	EC002717
ETIM 9.0	EC002717
ETIM 10.0	EC002717

Dimensioned drawings

All dimensions in millimeters

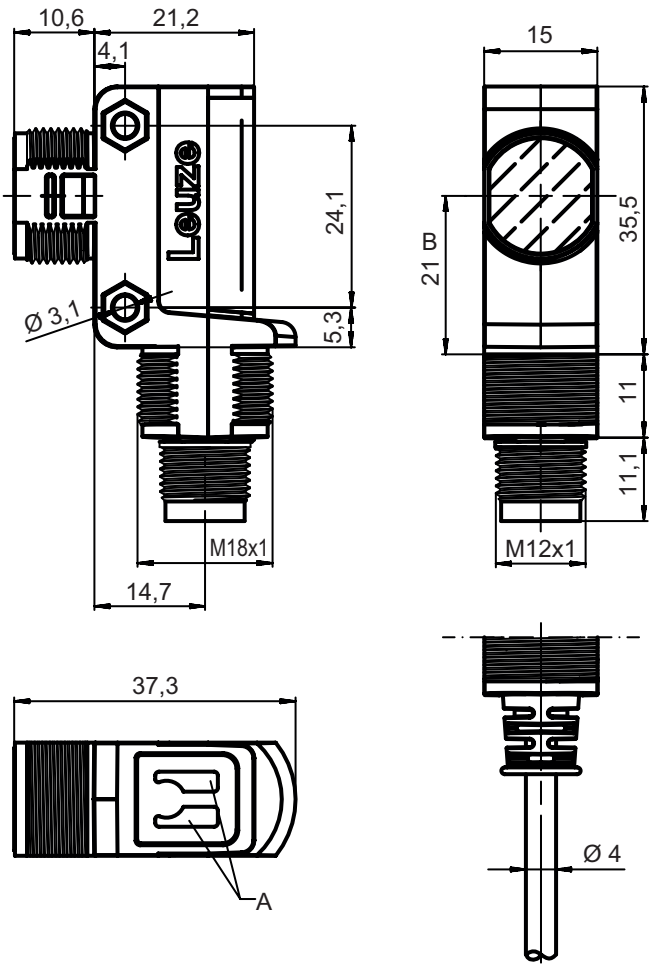

A Indicator diode
B Optical axis

Electrical connection

Connection 1

Function	Signal OUT
	Voltage supply
Type of connection	Connector
Thread size	M12
Material	Plastic
No. of pins	4 -pin
Encoding	A-coded

Pin	Pin assignment
1	V+
2	OUT 2
3	GND
4	OUT 1

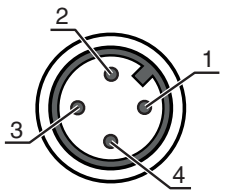

Diagrams

Typ. response behavior (TKS100x100)

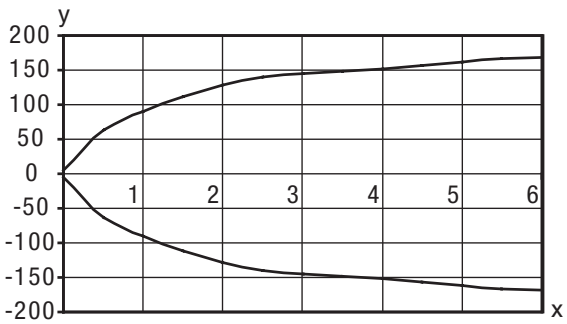

x Distance [m]
y Misalignment [mm]

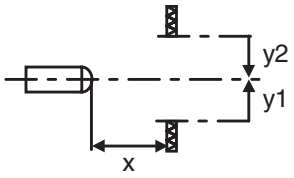

Typ. function reserve

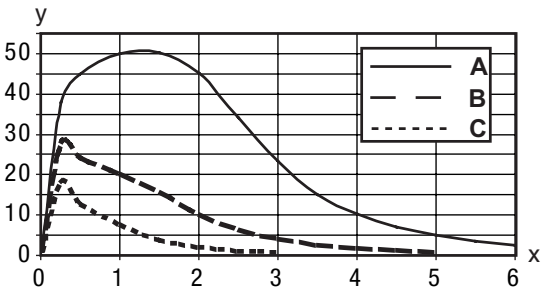

x Distance [m]
y Function reserve

A TKS 100x100
B TKS 40x60
C TKS 20x40

Operation and display

LED	Display	Meaning
1	Green, continuous light	Operational readiness
2	Yellow, continuous light	Light path free
	Yellow, flashing	No function reserve

Reflectors & reflective tapes

	Part no.	Designation	Operating range Operating range limit	Description
	50108300	REF 4-A-50x50	0.08 ... 1.4 m 0.08 ... 2 m	Design: Rectangular Reflective surface: 50 mm x 50 mm Material: Plastic Chemical designation of the material: PMMA Fastening: Self-adhesive

Reflectors & reflective tapes

	Part no.	Designation	Operating range Operating range limit	Description
	50003192	TK 100x100	0.02 ... 4.5 m 0.02 ... 6 m	Design: Rectangular Triple reflector size: 4 mm Reflective surface: 96 mm x 96 mm Material: Plastic Base material: Plastic Chemical designation of the material: PMMA8N Fastening: Rear side can be glued
	50003189	TK 30x50	0.03 ... 1.9 m 0.03 ... 2.5 m	Design: Rectangular Triple reflector size: 4 mm Reflective surface: 29 mm x 45 mm Material: Plastic Base material: Plastic Chemical designation of the material: PMMA8N Fastening: Rear side can be glued
	50024127	TK 82.2	0.05 ... 3.6 m 0.05 ... 4.5 m	Design: Round Triple reflector size: 4 mm Reflective surface, diameter: 79 mm Material: Plastic Base material: Plastic Chemical designation of the material: PMMA8N Fastening: Through-hole mounting, Rear side can be glued
	50022816	TKS 100X100	0.02 ... 4.5 m 0.02 ... 6 m	Design: Rectangular Triple reflector size: 4 mm Reflective surface: 96 mm x 96 mm Material: Plastic Base material: Plastic Chemical designation of the material: PMMA8N Fastening: Through-hole mounting, Adhesive
	50081283	TKS 20X40	0.04 ... 1.6 m 0.04 ... 2.2 m	Design: Rectangular Triple reflector size: 2.3 mm Reflective surface: 16 mm x 38 mm Material: Plastic Base material: Plastic Chemical designation of the material: PMMA8N Fastening: Through-hole mounting, Adhesive
	50023525	TKS 30X50	0.03 ... 1.9 m 0.03 ... 2.5 m	Design: Rectangular Triple reflector size: 3 mm Reflective surface: 27 mm x 44 mm Material: Plastic Base material: Plastic Chemical designation of the material: PMMA8N Fastening: Through-hole mounting, Adhesive
	50040820	TKS 40X60	0.02 ... 3 m 0.02 ... 4 m	Design: Rectangular Triple reflector size: 4 mm Reflective surface: 37 mm x 56 mm Material: Plastic Base material: Plastic Chemical designation of the material: PMMA8N Fastening: Through-hole mounting, Adhesive

Part number code

Part designation: **AAA28D-E.F/GG-HH**

AAA28	**Operating principle / construction** LS28: throughbeam photoelectric sensor transmitter LE28: throughbeam photoelectric sensor receiver ET28: energetic diffuse reflection sensor FT28: diffuse reflection sensor with fading PRK28: retro-reflective photoelectric sensor with polarization filter
d	**Light type** n/a: red light I: infrared light
E	**Preset range (optional)** n/a: operating range acc. to data sheet xxxF: Preset range [mm]
F	**Equipment** 3: teach-in via button
GG	**Switching output / function (OUT1 = pin 4, OUT2 = pin 2):** 2: NPN transistor output, light switching N: NPN transistor output, dark switching 4: PNP transistor output, light switching P: PNP transistor output, dark switching 9: deactivation input (deactivation with high signal) D: Input for transmitter deactivation (deactivation with LOW signal) X: pin not used
HH	**Electrical connection** n/a: cable, standard length 2000 mm, 4-wire 200-M8: cable, length 200 mm with M8 connector, 4-pin, axial (plug) 200-M12: cable, length 200 mm with M12 connector, 4-pin, axial (plug)

Note

- A list with all available device types can be found on the Leuze website at www.leuze.com.

Notes

Observe intended use!

- This product is not a safety sensor and is not intended as personnel protection.
- The product may only be put into operation by competent persons.
- Only use the product in accordance with its intended use.

For UL applications:

- For UL applications, use is only permitted in Class 2 circuits in accordance with the NEC (National Electric Code).
- These proximity switches shall be used with UL Listed Cable assemblies rated 30V, 0.5A min, in the field installation, or equivalent (categories: CYJV/CYJV7 or PVVA/PVVA7)

Further information

- Sum of the output currents for both outputs, 50 mA for ambient temperatures > 40 °C

Accessories

Connection technology - Connection cables

	Part no.	Designation	Article	Description
	50130652	KD U-M12-4A-V1-050	Connection cable	Connection 1: Connector, M12, Axial, Female, A-coded, 4 -pin Connector, LED: No Connection 2: Open end Shielded: No Cable length: 5.000 mm Sheathing material: PVC
	50130690	KD U-M12-4W-V1-050	Connection cable	Connection 1: Connector, M12, Angled, Female, A-coded, 4 -pin Connector, LED: No Connection 2: Open end Shielded: No Cable length: 5.000 mm Sheathing material: PVC

Mounting technology - Mounting brackets

	Part no.	Designation	Article	Description
	50124651	BT 205M-10SET	Mounting device set	Design of mounting device: Angle, L-shape Fastening, at system: Through-hole mounting Mounting bracket, at device: Screw type Type of mounting device: Rigid Material: Metal

Mounting technology - Rod mounts

	Part no.	Designation	Article	Description
	50117255	BTU 200M-D12	Mounting system	Design of mounting device: Mounting system Fastening, at system: For 12 mm rod, Sheet-metal mounting Mounting bracket, at device: Screw type, Suited for M3 screws Type of mounting device: Clampable, Adjustable, Turning, 360° Material: Metal

Standard reflectors

	Part no.	Designation	Article	Description
	50081283	TKS 20X40	Reflector	Design: Rectangular Triple reflector size: 2.3 mm Reflective surface: 16 mm x 38 mm Material: Plastic Base material: Plastic Chemical designation of the material: PMMA8N Fastening: Through-hole mounting, Adhesive
	50040820	TKS 40X60	Reflector	Design: Rectangular Triple reflector size: 4 mm Reflective surface: 37 mm x 56 mm Material: Plastic Base material: Plastic Chemical designation of the material: PMMA8N Fastening: Through-hole mounting, Adhesive

Accessories

Reflective tapes for standard applications

	Part no.	Designation	Article	Description
	50108300	REF 4-A-50x50	Reflective tape	Design: Rectangular Reflective surface: 50 mm x 50 mm Material: Plastic Chemical designation of the material: PMMA Fastening: Self-adhesive

Note

A list with all available accessories can be found on the Leuze website in the Download tab of the article detailed page.