Brand of NTN corporation

Technical data

UCP.216

Bearing units



Grey cast housing, radial insert ball bearing with socket set screws,seal with slinger

KIT CONTENT

UC216G2, P216

VISUAL (S)

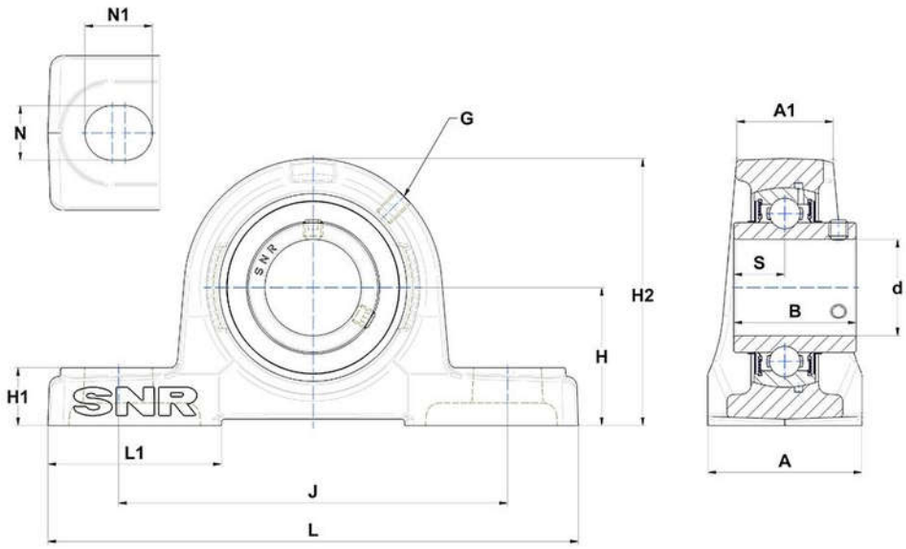

PRODUCT DEFINITION

Brand	SNR
A - Housing width	78 mm
A1 - Housing top width	51 mm
B - Width of Inner Ring	82,6 mm
d - Shaft diameter	80 mm
G - Grease fitting	M10x1

PRODUCT DEFINITION	
H - Distance mounting base to centerline spheric. seating diam.	88,9 mm
H1 - Housing foot height	30 mm
H2 - Housing height	175 mm
J - Mounting holes distance	232 mm
L - Housing length	292 mm
L1 - Housing foot length	91 mm
N - Mounting hole dimension	25 mm
N1 - Mounting hole length	31 mm
S - Distance front side/bearing centre	33,3 mm

PRODUCT PERFORMANCE	
C - Dynamic load rating	72500000 mN
C0 - Static load rating	54200000 mN
Operating temperature min.	253,15 °K
Operating temperature max.	373,15 °K

OTHER FEATURES	
Mass	8,99 kg
Recommended tightening torque for set screw	33 N-m