C3AW

Trigger switch for DC Brushless tools

Ensure miniature, dust tight, vibration resistance, shock resistance and durability



- **C3AW achieves anti-dust (IEC IP6X) by mounting sealed boots and ultrasonic welding connection between cover cases.**
- **Strengthen contact shock resistance (There is not 100 μs or more of chattering within 3,000 m/s²)**
- **Durability for trigger is 300,000 operations or more**
- **Wire saving by connecting flat cable AWG#28 directly to the switch**

RoHS Compliant

Be sure to read *Safety Precautions* on page 4.

Model

Model	Minimum packing unit
C3AW-1A-8F	50

Note: Order in multiples of minimum packing unit.

Ratings

Rated voltage	Resistive load
42 VDC	10 mA

Note: The above rating values apply under the following test conditions.
(1) Ambient temperature: 20±15°C
(2) Ambient humidity: 65±20%
(3) Operating frequency: 1 sec ON, 4 sec OFF

Approved Safety Standards

UL (UL61058-1)

Rated voltage Model	C3AW
42 VDC	10 RmA

Mechanical Characteristics

Mechanical durability	**Trigger**	Operation cycle: 300,000 or more, Operating speed and frequency: 400 mm/sec, 60 /min
	Lever	Operation cycle: 50,000 or more, Operating frequency: 60 /min
Electrical durability		Operating cycle: 200,000 or more, resistance load DC 42 V 10 mA
Vibration resistance		Double amplitude 1.5 mm, 10 to 2,000 Hz (Vibration acceleration: 200 m/s^2 max.) XYZ direction, 2 hrs each
Shock resistance		Malfunction 3000 m/s^2
Contact resistance (Initial) **(Voltage drop method at DC 6 V 1 mA)**		Flat Cable No. 1-5 (At TTP): 10 Ω max. Flat Cable No. 4-6 (Lever at F position): 10 Ω max. Flat Cable No. 4-7 (Lever at R position): 10 Ω max.
Insulation resistance (Between terminals) **(Insulation resistance meter at DC 250 V)**		Flat Cable No. 1-5 (At FP): 100 MΩ min. Flat Cable No. 4-7 (Lever at F position): 100 MΩ min. Flat Cable No. 4-6 (Lever at R position): 100 MΩ min.
Dielectric strength (Between terminals)		Flat Cable No. 1-5 (At FP): AC 250 V 1 min Flat Cable No. 4-7 (Lever at F position): AC 250 V 1 min Flat Cable No. 4-6 (Lever at R position): AC 250 V 1 min
Operating temperature limit		-20°C to +65°C (without icing and condensing)
Operating humidity limit		85% RH max. (at +5°C to +35°C)
Protective structure		IEC IP6X

Note: These are initial values.

Operation Characteristics

Content		Trigger	Lever
Total operating force	**TTF max.*1**	20 N	5 ±3 N
Release force	**RF min.*2**	1 N	---
Main switch ON position (A-B)	**PT1**	2.0 ±0.3 mm	---
Variable output start position (A-C)	**PT2**	2.8 ±0.4 mm	---
Full speed position (A-D)	**PT3**	6.5 ±0.5 mm	---
Total travel (A-E)	**TT**	8.5 ±0.5 mm	(13°)

Note: These are initial values.
***1.** TTF is maximum load of up to total travel.
***2.** RF is the value of the minimum of up to return to the front of 1 mm free position (FP) from total travel position (TTP).
***3.** The lever load is measured in the position shown in the figure below.

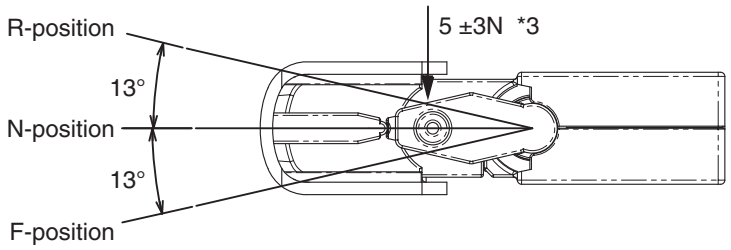

Output variation characteristics

Variable start voltage	**G**	0.3 V
Full speed start voltage	**J min.**	4.8 V

* The above output voltage is the voltage between flat cable Nos. 3 and 4 when DC 5 V is applied between flat cable Nos. 2 and 4.

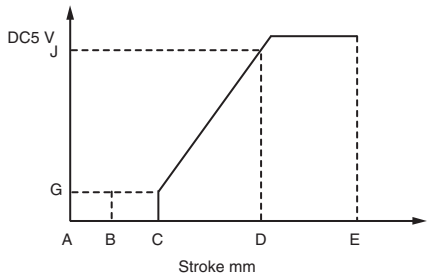

[Switch internal connection diagram]

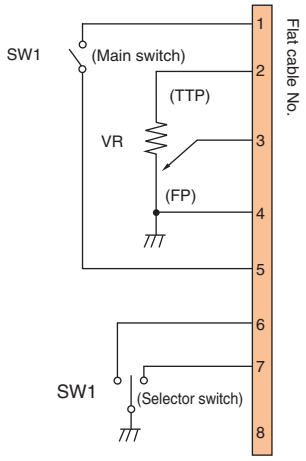

Structure

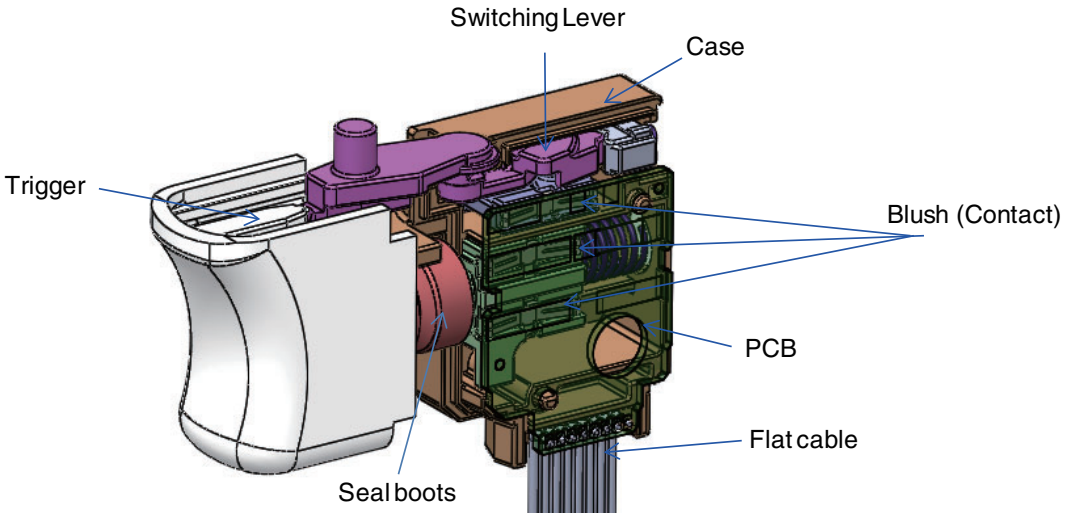

Dimensions

(Unit: mm)

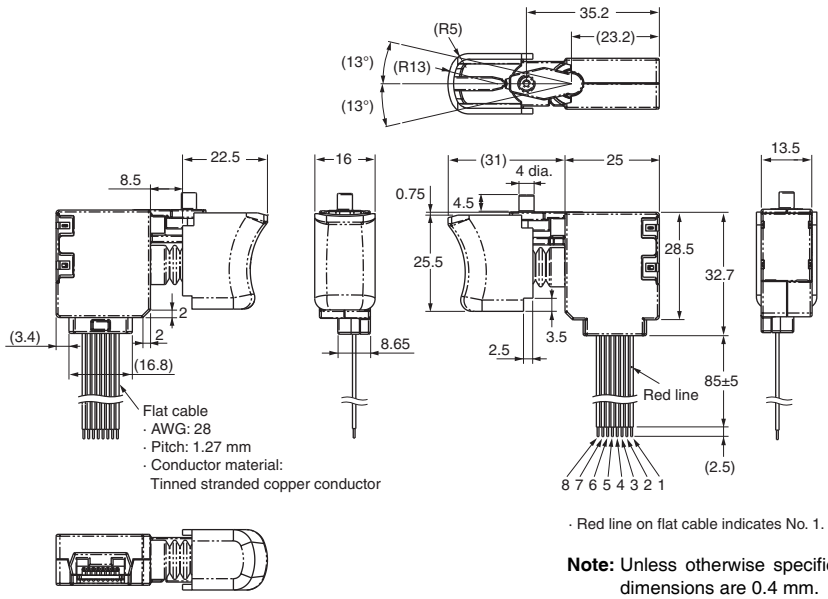

· Red line on flat cable indicates No. 1.

Note: Unless otherwise specified, tolerances in above dimensions are 0.4 mm.

Safety Precautions

Usage and storage environment

1. Do not use/store the products where it is subject to corrosive gasses such as $H_2S/SO_2/NH_3/HNO_3/Cl_3$, and sea breeze.
2. Do not apply any force which causes deformation and deterioration.
3. Do not apply oil to the product.
4. Avoid direct sun.
5. Do not storage where visible dust is.

Flat cable connections

• Please use it after confirming the cable is properly connected.

Precautions for Safe Use

● **Always observe the following cautions to ensure safety.**

Mounting

Before mounting, dismounting, wiring, or inspecting a switch, be sure to turn OFF the power supply to the switch, otherwise an electric shock may be received or the switch may burn.

Wiring

- Do not perform wiring when power is being supplied to a switch. Also, do not touch any of the charged terminals when power is being supplied. Otherwise, electric shock may be received.
- Follow the instructions provided in *Correct Use* for all wiring and soldering work. Using a switch with improper wiring or soldering may result in abnormal heating when power is supplied, possibly resulting in burning.

Contact Load

Select suitable switch ratings after confirming contact load. If the contact load is excessive for the contacts, the contacts may weld or shift, possibly resulting in short-circuits or burning when power is supplied.

Load Types

Some types of loads have a large difference between steady-state current and inrush current, as shown in the following diagram. Select a switch with ratings suitable for the type of load. Select a switch with ratings suitable for the type of load. The higher the inrush current in the closed circuit is, the more the contact abrasion or shift there will be. Consequently, contact welding or shifting may occur, possibly resulting in short-circuits or burning.

Types of Load vs. Inrush Current

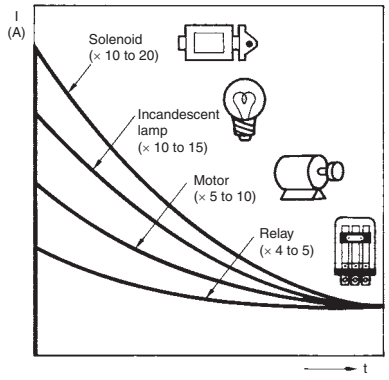

Operating Atmosphere

Do not use switches in atmospheres containing combustible or explosive gases. Arc or heat generated by switching may cause fires or explosions.

Shock on Individual Switches

Do not drop or disassemble switches. Not only will characteristics be jeopardized, but also damage, electric shock, or burning may result.

Durability

The durability of a switch greatly varies with switching conditions. Before using a switch, be sure to test the switch under actual conditions in the actual application and to use the switch within the switching operations causing no problem. If a deteriorated switch is used continuously, insulation failures, contact welding, contact failures, switch damage, or switch burnout may result.

Precautions for Correct Use

Using Switches

- When switches are actually used, unforeseen accidents may occur. Before using a switch, perform all possible testing in advance.
- Unless otherwise specified, ratings and performances given in this catalog are for standard test conditions (i.e., +5 to +35°C, and +45% to +85% humidity). When performing testing in the actual application, always use the same conditions as will be used in actual usage conditions for both the load and the operating environment.
- Reference data provided in this catalog represents actual measurements from production samples in graph form. All reference data values are nominal.
- All ratings and performance values provided in this catalog are the results of a single test each rating and performance value therefore may not be met for composite conditions.
- Output voltage changes due to the brush sliding along the top surface of the circuit board in the switch. When there is contact resistance between the circuit board and the brush, it goes into a state of high impedance, and the output voltage fluctuates. To prevent this from happening, a pull-up/down circuit can be implemented.
  Check the level of output voltage fluctuations and compatibility of this circuit with your application to determine if this switch fits your needs.

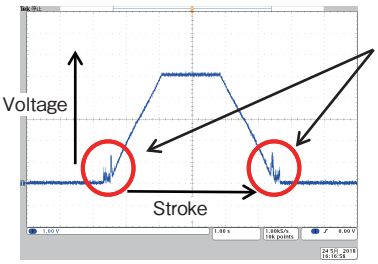

Please check each region's Terms & Conditions by region website.

OMRON Corporation

Electronic and Mechanical Components Company

Regional Contact

Americas
https://www.components.omron.com/

Europe
http://components.omron.eu/

Asia-Pacific
https://ecb.omron.com.sg/

China
https://www.ecb.omron.com.cn/

Korea
https://www.omron-ecb.co.kr/

Japan
https://www.omron.co.jp/ecb/

© OMRON Corporation 2018 All Rights Reserved.
In the interest of product improvement, specifications are subject to change without notice.

Cat. No. A275-E1-01
0518(0518)(O)