GB-distribution boxes and enclosures

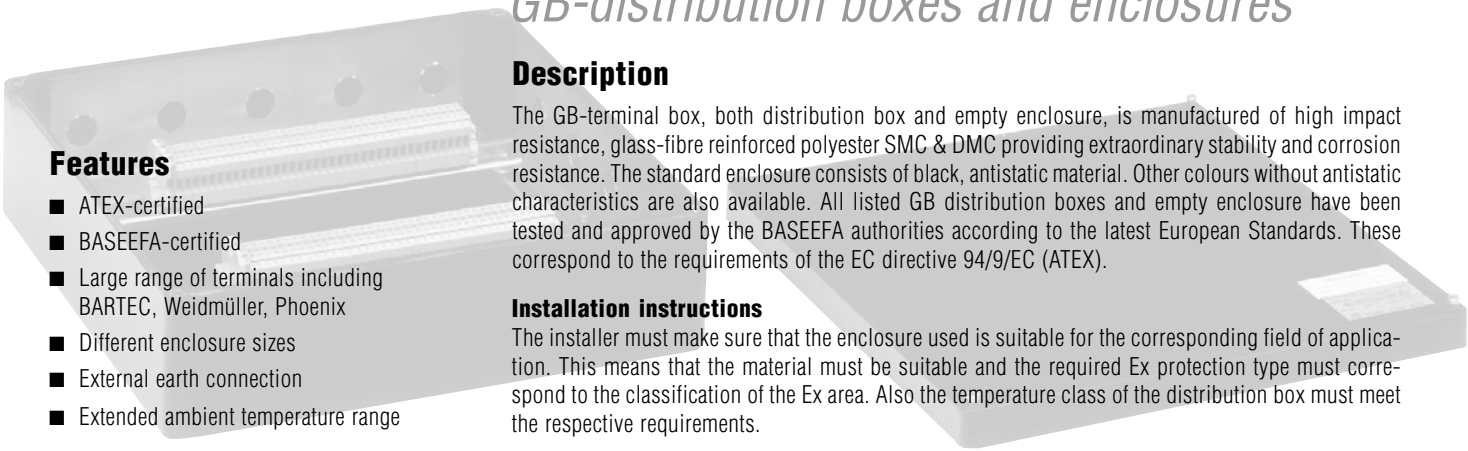

Features

- ATEX-certified
- BASEEFA-certified
- Large range of terminals including BARTEC, Weidmüller, Phoenix
- Different enclosure sizes
- External earth connection
- Extended ambient temperature range

Description

The GB-terminal box, both distribution box and empty enclosure, is manufactured of high impact resistance, glass-fibre reinforced polyester SMC & DMC providing extraordinary stability and corrosion resistance. The standard enclosure consists of black, antistatic material. Other colours without antistatic characteristics are also available. All listed GB distribution boxes and empty enclosure have been tested and approved by the BASEEFA authorities according to the latest European Standards. These correspond to the requirements of the EC directive 94/9/EC (ATEX).

Installation instructions

The installer must make sure that the enclosure used is suitable for the corresponding field of application. This means that the material must be suitable and the required Ex protection type must correspond to the classification of the Ex area. Also the temperature class of the distribution box must meet the respective requirements.

Selection chart

Distribution box	Certification	Empty enclosures approved for components	Certification
GB-80	BAS98ATEX3090X	-	-
GB-110		-	
GB-122		GB-5195-1221/2090	BAS98ATEX3089U
GB-160		GB-5195-1601/6090	
GB-220		-	-
GB-260		GB-5195-2601/6090	BAS98ATEX3089U
GB-255		GB-5195-2552/5012	
GB-400/2		-	-
GB-400		GB-5195-4004/0512	BAS98ATEX3089U

Max. power dissipation for distribution boxes

Type	Max. power dissipation at ambient temperatures of +40 °C	+55 °C	+65 °C
GB-80	1.80	0.90	0.45
GB-110	2.20	1.10	0.55
GB-122	4.00	2.00	1.00
GB-160	7.00	3.50	1.75
GB-220	6.80	3.40	1.70
GB-260	9.00	4.50	2.25
GB-255	15.00	7.50	3.75
GB-400/2	21.40	10.70	5.35

Empty Ex-enclosure *EEx e-distribution boxe*	***Distribution box*** *GB-...*	***Enclosure*** *GB-5195-..../....*
Explosion protection		
Ex protection type BS EN 50014, BS EN 50019; 1994 EN 50281-1-1; 1998	Ⓔx II 2G EEx e II T6, II 2G EEx e II BS EN 50014, BS EN 50019; 1994	Ⓔx II 2G EEx e II T6, II 2G EEx e II
Ambient temperature ranges (special temperature range on request)	-20 °C to +40 °C extended ambient temperature range -55 °C to +65 °C	-20 °C to +40 °C extended ambient temperature range -55 °C to +65 °C
Technical data		
Material	polyester, black, antistatic, glass-fibre reinforced, surface resistance < 10^9 Ω flame retardant: IEC 92.1, UL94VO	polyester glass-fibre reinforced, surface resistance > 10^9 Ω flame retardant: IEC 92.1, UL94VO
Colour/coating	polyester, black, anti-static	polyester
Lid screws (other models on request)	captive slotted or hexagon socket screw, high-quality stainless steel 316	captive slotted or hexagon socket screw, high-quality stainless steel 316
Standard seals	captive silicone o-ring in featherkey and keyway,,arrangement, protected against the penetration of foreign matters, acc. to IP 66 (IEC 60529/EN 60529)	captive silicone o-ring in featherkey and keyway, arrangement, protected against the penetration of foreign matters, acc. to IP 66 (IEC 60259/EN 60529)
Mechanical resistance acc. to EN 50014	impact energy ≤ 2 x 7 Nm	impact energy ≤ 2 x 7 Nm
Protection class acc. to 60529/IEC 60529	IP 66	IP 66
Power dissipation	see selection chart (without BTB-122)	see selection chart (without BTB-122)
Certification	EC model test certification BAS98ATEX3090X	EC model test certification BAS98ATEX3089U
Accessories	XE earthing studs, ES earthing studs, WB wall bracket, PB pipe bracket FB high-quality steel fixing bracket	XE earthing studs, ES earthing studs, WB wall bracket, PB pipe bracket FB high-quality steel fixing bracket

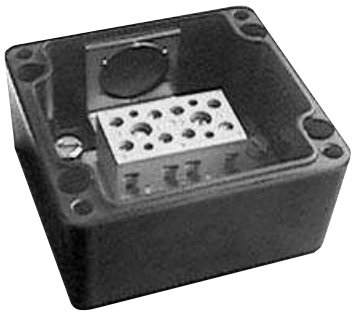



Distribution box GB-80

Dimensions

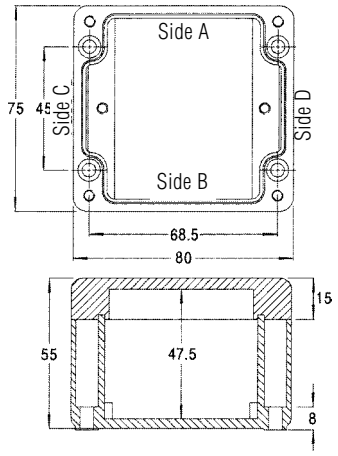

All dimensions in mm.
Fixing hole diameter 5 mm.

Selection chart

Max. number of terminals	Max. current A	Max. voltage V	Conductor size range mm²	Earth terminal	Conductor size range mm²
6 AKZ 4	15	275	0.5 to 2.5	AKE 4	0.22 to 4.0
4 AKZ 4	21		0.5 to 4.0		
BK 3 (1 x 3-pole)	21	275	0.5 to 4.0	DFG 1	0.22 to 4.0
BK 3 (1 x 3-pole)				2 MK (2-pole)	
BK 4 (1 x 4-pole)				DFG 1	
BK 4 (1 x 4-pole)				2 MK (2-pole)	
BK 6 (1 x 6-pole)	20			DFG 1	
BK 6 (1 x 6-pole)				2 MK (2-pole)	
BARTEC Mini-terminal (1 x 3-pole)	16	420	0.5 to 2.5	DFG 1	
BARTEC Mini-terminal (2 x 2-pole)	14				

The number of terminals listed above depends on the maximum conductor size and maximum current. At least one earth terminal must be supplied.
The enclosure can be mounted with the terminal strip horizontally or vertically aligned.

Entry positions

View on sides A+B

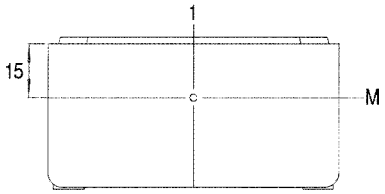

Standard entry arrangements

Thread size	Side	Max. entries per side	Position of hole	Notes
M 20	A+B	1	1M	Locknuts max. 27 mm A/C*

■ EEx e plug elements can be fitted, if required

*A/C = Across Corner

➡ Order no.: GB-80

03-0330-0201-06/03-BCS-B201172/2E





Distribution box
GB-110

Dimensions

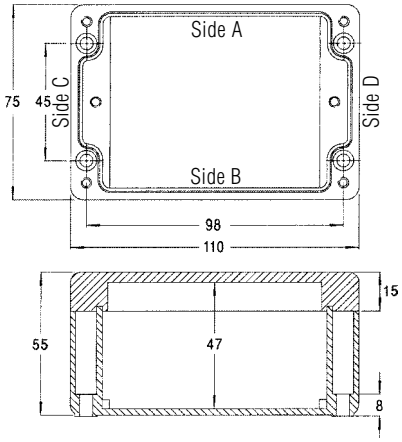

All dimensions in mm.
Fixing hole diameter 5 mm.

Selection chart

Max. number of terminals	Max. current (A)	Max. voltage (V)	Conductor size (mm²)	Earth terminal	Conductor size (mm²)
7 AKZ 4	15	275	0.5 to 2.5	AKE 4	0.22 to 4.0
5 AKZ 4	21		0.5 to 4.0		
BK 3 (1 x 3-pole)	21	275	0.5 to 4.0	DFG 1	0.22 to 4.0
BK 3 (1 x 3-pole)				2 MK (2-pole)	
BK 4 (1 x 4-pole)				DFG 1	
BK 4 (1 x 4-pole)				2 MK (2-pole)	
BK 6 (1 x 6-pole)				DFG 1	
BK 6 (1 x 6-pole)				2 MK (2-pole)	
BARTEC Mini-terminal (1 x 3-polig)	16	420	0.5 to 2.5	DFG 1	
BARTEC Mini-terminal (2 x 2-pole)	15				
BARTEC Mini-terminal (2 x 3-pole)	12				

The number of terminals listed above depends on the maximum conductor size and maximum current. At least one earth terminal must be supplied.
The enclosure can be mounted with the terminal strip horizontally or vertically aligned.

Entry positions

View on sides A+B

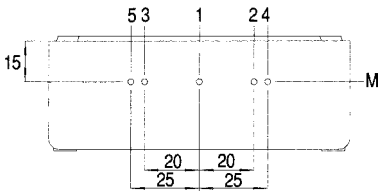

Standard entry arrangements

Thread size	Side	Max. entries per side	Position of hole	Notes
M 20	A+B	1 2	1M 2M, 3M (or 4 m, 5M)	Locknuts max. 27 mm A/C*

■ EEx e plug elements can be fitted, if required

*A/C = Across Corner

➡ **Order no.: GB-110**

03-0330-0201-06/03-BCS-B201172/3E





Distribution box GB-122

Selection chart

Max. number of terminals		Max. current (A)	Max. voltage (V)	Conductor size (mm²)	Earth terminal	Conductor size (mm²)
10	SAK 2.5	15	550	0.5 to 2.5	EK 4	0.5 to 4.0
8	SAK 4	21		0.5 to 4.0		
6	SAK 6N	26		0.5 to 6.0	EK 10	2.5 to 10.0
5	SAK 10	37		2.5 to 10.0		
12	WDU 2.5	15	726	0.22 to 2.5	WPE 2.5	1.5 to 2.5
9	WDU 4	21		1.5 to 4.0	WPE 4	1.5 to 4.0
9	WDU 6	26		1.5 to 6.0	WPE 6	1.5 to 6.0
6	WDU 10	37		1.5 to 10.0	WPE 10	1.5 to 10.0
6	WDU 16	47		1.5 to 16.0	WPE 16	1.5 to 16.0
3	WDU 35	75		2.5 to 35.0	WPE 35	2.5 to 35.0
BK 3	(1 x 3-pole)	21	275	0.5 to 4.0	BET 2	0.5 to 16.0
BK 4	(1 x 4 -pole)					
BK 6	(1 x 6-pole)					
BK 12	(1 x 12-pole)	20				
MK 6/6	(1 x 6-pole)	26	418			
BTB 4	(1 x 4-pole)	37	726	0.5 to 16.0	BET 2	0.5 to 16.0
BTB 6	(1 x 6-pole)					

- A maximum of 2 earth bars type QS3 may be supplied.
- Alternative terminal types are available.

The number of terminals listed above depends on the maximum conductor size and maximum current. At least one earth terminal must be supplied.
The enclosure can be mounted with the terminal strip horizontally or vertically aligned.

Dimensions

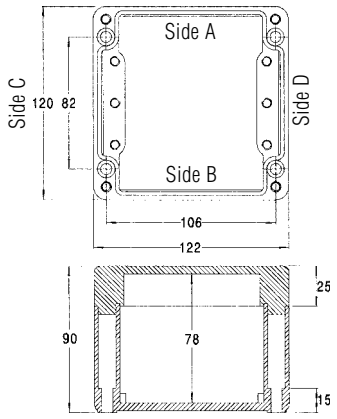

All dimensions in mm.
Fixing hole diameter 7 mm.

Entry positions

View on sides A+B

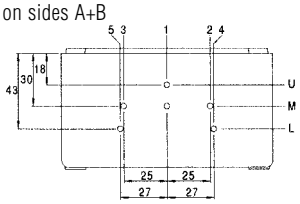

View on sides C+D
(viewed from side C)

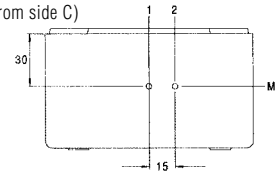

Entries on sides C+D are directly opposite each other.

View on sides F

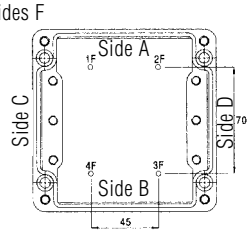

Standard entry arrangements				
Thread size	Side	Max. entries per side	Position of holes	Notes
M 20	A+B	1	1M	
		2	2M, 3M	
		3	1U, 4L, 5L	Not with ECP fitted and locknuts max. 27 mm A/C*
	C+D	1	1M	Not when terminal strip fitted
		1	2M	Not when QS3 fitted
M 25	A+B	1	1M	
		2	2M, 3M	Locknut max. 40 mm A/C*
M 32	A+B	1	1M	

- The threaded boreholes can be different at each end.
- EEx e plug elements can be fitted, if required.

Special rear entry positions			
Thread size	Side	Max. entries per side	Position of holes
M 20	F	4	1F, 2F, 3F, 4F

- Single M 20 entry in the lid is possible.

*A/C = Across Corner

➡ **Order no.: GB-122**

03-0330-0201-06/03-BCS-B201172/4E

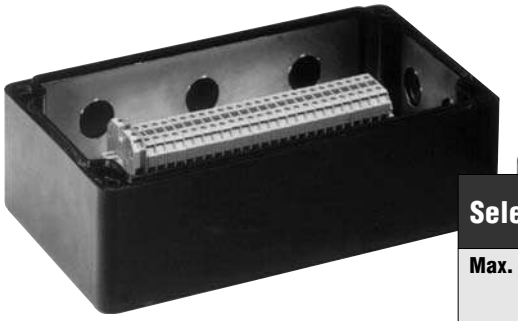



Distribution box GB-220

Selection chart

Max. number of terminals	Max. current (A)	Max. voltage (V)	Conductor size (mm²)	Earth terminal	Conductor size (mm²)
12 SAK 2.5	15	550	0.5 to 2.5	EK 4	0.5 to 4.0
10 SAK 4	21		0.5 to 4.0		
9 SAK 6N	26		0.5 to 6.0	EK 10	2.5 to 10.0
9 SAK 10	37		2.5 to 10.0		
12 WDU 2.5	15	726	0.22 to 2.5	WPE 2.5	1.5 to 2.5
9 WDU 4	21		1.5 to 4.0	WPE 4	1.5 to 4.0
10 WDU 6	26		1.5 to 6.0	WPE 6	1.5 to 6.0
7 WDU 10	37		1.5 to 10.0	WPE 10	1.5 to 10.0
7 WDU 16	47		1.5 to 16.0	WPE 16	1.5 to 16.0
4 WDU 35	75		2.5 to 35.0	WPE 35	2.5 to 35.0
BK 3 (1 x 3-pole)	21	275	0.5 to 4.0	BET 2	0.5 to 16.0*
BK 4 (1 x 4-pole)					
BK 6 (1 x 6-pole)					
BK 12 (1 x 12-pole)	20				
MK 6/6 (1 x 6-pole)	26	418			
BTB 4 (1 x 4-pole)	37	726	0.5 to 16.0*	BET 2	0.5 to 16.0*
BTB 4 (2 x 4-pole) BTB 6 (1 x 6-pole)					
BTB 6 (2 x 6-pole)					

- A maximum of 2 earth bars type QS3 may be supplied.
- Alternative terminal types are available.

The number of terminals listed above depends on the maximum conductor size and maximum current. At least one earth terminal must be supplied.
The enclosure can be mounted with the terminal strip horizontally or vertically aligned.

Dimensions

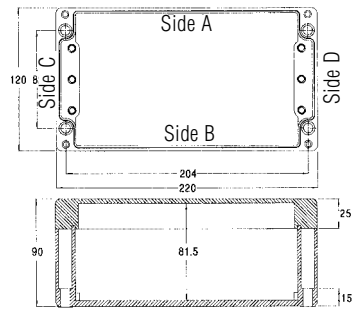

All dimensions in mm.
Fixing hole diameter 7 mm.

Entry positions

View on sides A+B

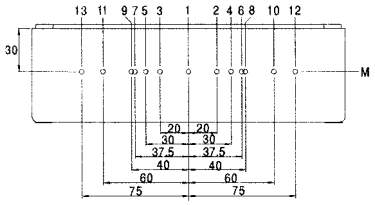

View on sides C+D
(viewed from side C)

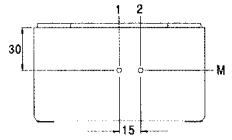

Entries on sides C+D are directly opposite each other.

View on sides F

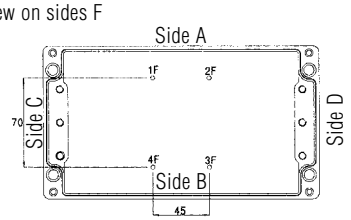

Standard entry arrangements

Thread size	Side	Max. entries per side	Position of holes	Notes
M 20	A+B	3 4 5	1M, 8M, 9M, 2M, 3M, 10M, 11M 1M, 6M, 7M, 12M, 13M	
	C+D	1	1M oder 2M	Not when QS3 earth bar fitted
M 25	A+B	2 3	4M, 5M 1M, 10M, 11M	
M 32	A+B	2	4M, 5M	

- The threaded boreholes can be different at each end.
- EEx e plug elements can be fitted, if required.

Special rear entry positions

Thread size	Side	Max. entries per side	Position of holes
M 20	F	4	1F, 2F, 3F, 4F

- Single M 20 entry in the lid is possible.

➡ **Order no.: GB-220**

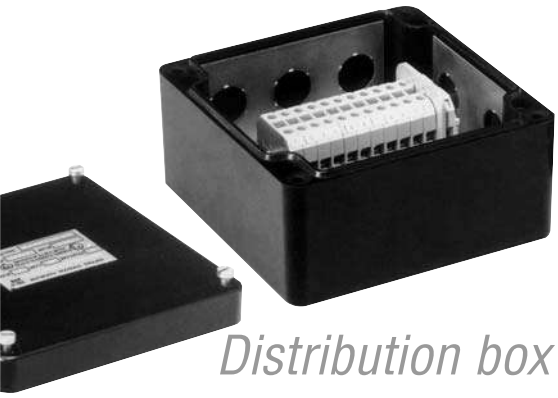

Distribution box GB-160

Selection chart

Max. number of terminals	Max. current (A)	Max. voltage (V)	Conductor size (mm²)	Earth terminal	Conductor size (mm²)
15 SAK 2.5	15	550	0.5 to 2.5	EK 4	0.5 to 4.0
14 SAK 4	21		0.5 to 4.0		
11 SAK 6N	26		0.5 to 6.0	EK 10	2.5 to 10.0
8 SAK 10	37		2.5 to 10.0		
7 SAK 16	47		6.0 to 16.0	EK 16	6.0 to 16.0
17 WDU 2.5	15	726	0.22 to 2.5	WPE 2.5	1.5 to 2.5
13 WDU 4	21		1.5 to 4.0	WPE 4	1.5 to 4.0
13 WDU 6	26		1.5 to 6.0	WPE 6	1.5 to 6.0
9 WDU 10	37		1.5 to 10.0	WPE 10	1.5 to 10.0
9 WDU 16	47		1.5 to 16.0	WPE 16	1.5 to 16.0
5 WDU 35	75		2.5 to 35.0	WPE 35	2.5 to 35.0
BK 3 (1 x 3-pole)	21	275	0.5 to 4.0	BET 2	0.5 to 16.0*
BK 4 (1 x 4-pole)					
BK 6 (1 x 6-pole)					
BK 12 (1 x 12-pole)					
1 x BK 4 + 1 x BK12					
BTB 4 (1 x 4-pole)	37	726	0.5 to 16.0*	BET 2	0.5 to 16.0*
BTB 4 (2 x 4-pole)					
BTB 6 (1 x 6-pole)					
BTB 6 (2 x 6-pole)					

- A maximum of 2 earth bars type QS4 may be supplied.
- Alternative terminal types are available.

The maximum number of terminals listed above depends on the maximum conductor size and maximum current. At least one earth terminal must be supplied.
The enclosure can be mounted with the terminal strip horizontally or vertically aligned.

Dimensions

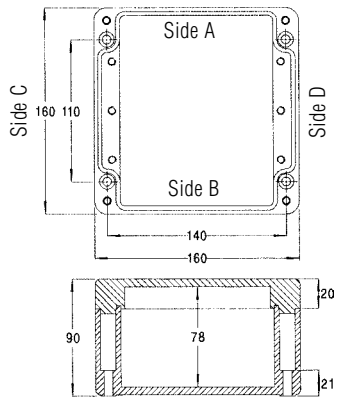

All dimensions in mm.
Fixing hole diameter 7 mm.

Entry positions

View on sides A+B

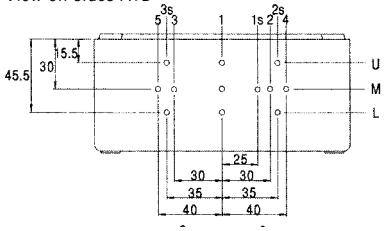

View on sides C+D

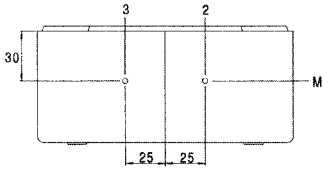

View on sides F

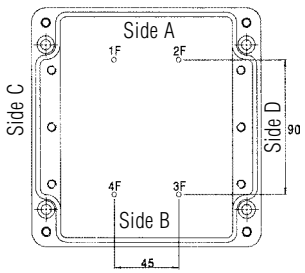

Standard entry arrangements				
Thread size	Side	Max. entries per side	Position of holes	Note
M 20	A+B	3	1M, 4M, 5M	
	C+D	2	2M, 3M	Not when QS4 earth bar fitted
M 25	A+B	1	1M	
		2	2M, 3M	Not when QS4 earth bar fitted
	C+D	2	2M, 3M	
M 32	A+B	2	2M, 3M	

- The threaded boreholes can be different at each end.
- EEx e plug elements can be fitted, if required.

Special rear entry positions			
Thread size	Side	Max. entries per side	Position of holes
M 20	F	4	1F, 2F, 3F, 4F

- Single M 20 entry in the lid is possible also.

Special side entry positions			
Thread size	Side	Max. entries per side	Position of holes
M 20	A+B	6	1U, 1L, 2sU, 2sL, 3sU, 3sL
M 20 + M 25	A+B	4 x M20	2sU, 2sL, 3sU, 3sL 1 x M25, 1M
M 20 + M 32	A+B	2 x M20 1 x M32	3sU, 3sL 1sM

- Single M 20 entry in the lid is possible.

➡ Order no.: GB-160

03-0330-0201-06/03-BCS-B201172/6E

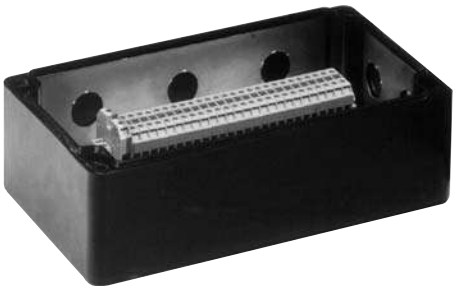



Distribution box GB-260

Selection chart

Max. number of terminals	Max. current (A)	Max. voltage (V)	Conductor size (mm²)	Earth terminal	Conductor size (mm²)
17 SAK 2.5	15	550	0.5 to 2.5	EK 4	0.5 to 4.0
31 SAK 2.5	11.5				
32 SAK 2.5	5				
13 SAK 4	21		0.5 to 4.0		
28 SAK 4	16				
30 SAK 4	5				
13 SAK 6N	26		0.5 to 6.0	EK 10	2.5 to 10.0
23 SAK 6N	20				
24 SAK 6N	5				
12 SAK 10	37		2.5 to 10.0		
18 SAK 10	28				
11 SAK 16	47	726	6.0 to 16.0	EK 16	6.0 to 16.0
15 SAK 16	35				
17 WDU 2.5	15		0.22 to 2.5	WPE 2.5	1.5 to 2.5
13 WDU 4	21		1.5 to 4.0	WPE 4	1.5 to 4.0
13 WDU 6	26		1.5 to 6.0	WPE 6	1.5 to 6.0
10 WDU 10	37		1.5 to 10.0	WPE 10	1.5 to 10.0
9 WDU 16	47		1.5 to 16.0	WPE 16	1.5 to 16.0
6 WDU 35	75		2.5 to 35.0	WPE 35	2.5 to 35.0

- A maximum of 2 earth bars type QS4 may be supplied.
- Alternative terminal types are available.

The maximum number of terminals listed above depends on the maximum conductor size and maximum current. At least one earth terminal must be supplied.
The enclosure can be mounted with the terminal strip horizontally or vertically aligned.

Dimensions

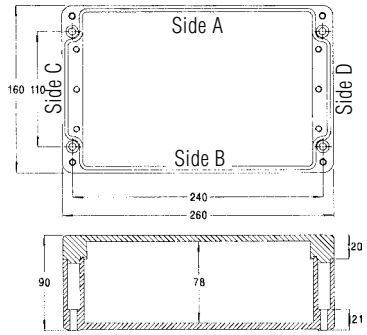

All dimensions in mm.
Fixing hole diameter 7 mm.

Entry positions

View on sides A+B

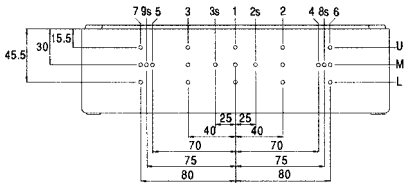

View on sides C+D

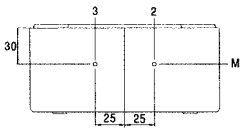

View on sides F

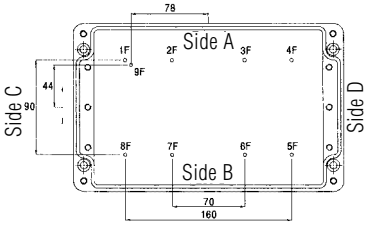

Standard entry arrangements			
Thread size	Side	Max. entries per side	Position of holes
M 20	A+B	5	1M, 2M, 3M, 6M, 7M
		10	1U, 2U, 3U, 6U, 7U, 1L, 2L, 3L, 6L, 7L
	C+D	2	2M, 3M
M 25	A+B	3	1M, 4M, 5M
		4	2sM, 3sM, 8sM, 9sM
	C+D	2	2M, 3M
M 32	A+B	3	1M, 4M, 5M

- The threaded boreholes can be different at each end.
- EEx e plug elements can be fitted, if required.

Special rear entry positions			
Thread size	Side	Max. entries per side	Position of holes
M 20	F	8	1F, 2F, 3F, 4F, 5F, 6F, 7F, 8F
M 32	F	1	9F

- Single M 20 entry in the lid is possible also.

➡ **Order no.: GB-260**



Distribution box GB-255

Selection chart

Max. number of terminals	Number of rails	Max. current (A)	Max. voltage (V)	Conductor size (mm²)	Earth terminal	Conductor size (mm²)
25 SAK 2.5	1 or 2	15	550	0.5 to 2.5	EK 4	0,5 bis 4,0
53 SAK 2.5	2	11.5				
62 SAK 2.5	2	5				
20 SAK 4	1 or 2	21		0.5 to 4.0		
44 SAK 4	2	16				
60 SAK 4	2	5				
19 SAK 6N	1 or 2	26		0.5 to 6.0	EK 10	2.5 to 10.0
42 SAK 6N	2	20				
48 SAK 6N	2	5				
17 SAK 10	1 or 2	37		2.5 to 10.0		
36 SAK 10	2	28				
12 SAK 16	1	47	726	2.5 to 10.0	EK 16	6.0 to 16.0
8 SAK 35N	1	75		2.5 to 10.0	EK 35	6.0 to 35.0
25 WDU 2.5	1 or 2	15		0.22 to 2.5	WPE 2.5	1.5 to 2.5
19 WDU 4	1 or 2	21		1.5 to 4.0	WPE 4	1.5 to 4.0
20 WDU 6	1 or 2	26		1.5 to 6.0	WPE 6	1.5 to 6.0
14 WDU 10	1 or 2	37		1.5 to 10.0	WPE 10	1.5 to 10.0
14 WDU 16	1 or 2	47		1.5 to 16.0	WPE 16	1.5 to 16.0
9 WDU 35	1 or 2	75		2.5 to 35.0	WPE 35	2.5 to 35.0

- A maximum of 2 earth connection bars type QS9 may be supplied.
- Alternative terminal types are available.

Dimensions

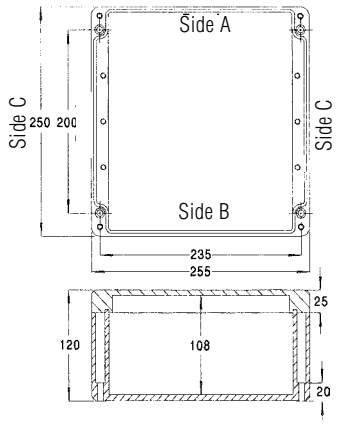

All dimensions in mm.
Fixing hole diameter 7 mm.

Entry positions

View on sides A+B

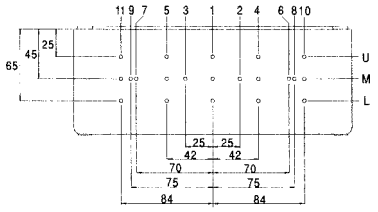

View on sides C+D

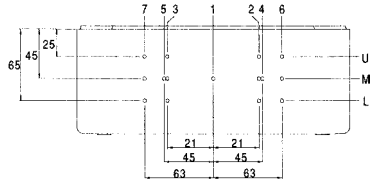

The maximum number of terminals listed above depends on the maximum conductor size and maximum current. At least one earth terminal must be supplied.
The enclosure can be mounted with the terminal strip horizontally or vertically aligned or fitted with a single diagonally mounted terminal strip.

Standard entry arrangements

Thread size	Side	Max. entries per side	Position of holes
M 20	A+B	5	1M, 4M, 5M, 10M, 11M
		10	1U, 4U, 5U, 10U, 11U, 1L, 4L, 5L, 10L, 11L
	C+D	4	2M, 3M, 6M, 7M
		8	2U, 3U, 6U, 7U, 2L, 3L, 6L, 7L
M 25	A+B	4	2M, 3M, 8M, 9M
	C+D	3	1M, 6M, 7M
M 32	A+B	3	1M, 6M, 7M
	C+D	2	4M, 5M
M 40	A+B	3	1M, 6M, 7M
	C+D	2	4M, 5M
M 50	A+B	1	1M
	C+D	1	1M

- The threaded boreholes can be different at each end.
- EEx e plug elements can be fitted, if required.

➡ Order no.: GB-255

Distribution box GB-400



Selection chart

Max. number of terminals	Number of rails	Max. current (A)	Max. voltage (V)	Conductor size (mm^2)	Earth terminal	Conductor size (mm^2)
33 SAK 2.5	1 or 2	15	550	0.5 to 2.5	EK 4	0.5 to 4.0
74 SAK 2.5	2	11.5				
108 SAK 2.5	2	5				
27 SAK 4	1 or 2	21		0.5 to 4.0	EK 10	2.5 to 10.0
59 SAK 4	2	16				
102 SAK 4	2	5				
26 SAK 6N	1 or 2	26		0.5 to 6.0		
56 SAK 6N	2	20				
84 SAK 6N	2	5				
23 SAK 10	1 or 2	37		2.5 to 10.0		
51 SAK 10	2	28				
20 SAK 16	1	47	726	6.0 to 16.0	EK 16	6.0 to 16.0
19 SAK 35N	1	75		2.5 bis 35.0	EK 35	6.0 to 35.0
12 SAK 70	1	114		25.0 to 70.0		
33 WDU 2,5	1 or 2	15		0.22 to 2.5	WPE 2.5	1.5 to 2.5
26 WDU 4	1 or 2	21		1.5 to 4.0	WPE 4	1.5 to 4.0
26 WDU 6	1 or 2	26		1.5 to 6.0	WPE 6	1.5 to 6.0
20 WDU 10	1 or 2	37		1.5 to 10.0	WPE 10	1.5 to 10.0
19 WDU 16	1 or 2	47		1.5 to 16.0	WPE 16	1.5 to 16.0
13 WDU 35	1 or 2	75		2.5 to 35.0	WPE 35	1.5 to 35.0

- A maximum of 2 earth bars type QS15 may be supplied.
- Alternative terminal types are available.

The maximum number of terminals listed above depends on the maximum conductor size and maximum current. At least one earth terminal must be supplied.
The enclosure can be mounted with the terminal strip horizontally or vertically aligned or connected with a single diagonally mounted terminal strip.

Dimensions

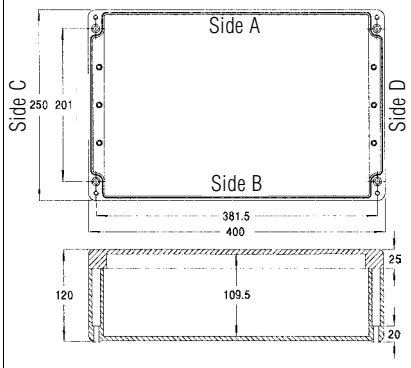

All dimensions in mm.
Fixing hole diameter 7 mm.

Entry positions

View on sides A+B and sides C+D

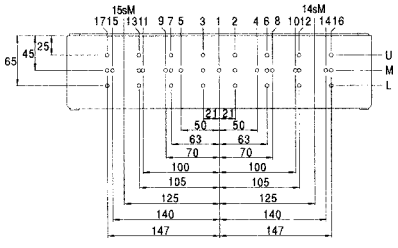

Standard entry arrangements

Thread size	Side	Max. entries per side	Position of holes
M 20	A+B and C+D	8	2M, 3M, 6M, 7M, 12M, 13M, 16M, 17M
		16	2U, 3U, 6U, 7U, 12U, 13U, 16U, 17U, 2L, 3L, 6L, 7L, 12L, 13L, 16L, 17L
M 25	A+B and C+D	7	1M, 4M, 5M, 10M, 11M, 16M, 17M
M 32	A+B and C+D	5	1M, 8M, 9M, 14M, 15M
M 40	A+B and C+D	5	1M, 8M, 9M, 14M, 15M
M 50	A+B and C+D	1	1M
		2	14sM, 15sM oder 1M, 14sM oder 1M, 15sM

- The threaded boreholes can be different at each end.
- EEx e plug elements can be fitted, if required.

➡ **Order no.: GB-400**



Distribution box GB-400/2

Selection chart

Max. number of terminals	Number of rails	Max. current (A)	Max. voltage (V)	Conductor size range (mm^2)	Earth terminal	Conductor size range (mm^2)
23 SAK 2.5	1 or 2	15	550	0.5 to 2.5	EK 4	0.5 - 4.0
18 SAK 4	1 or 2	21		0.5 to 4.0		
18 SAK 6N	1 or 2	26		0.5 to 6.0	EK 10	2.5 - 10.0
16 SAK 10	1 or 2	37		6.0 to 10.0		
15 SAK 16	1	47	726	6.0 to 16.0	EK 16	6.0 to 16.0
14 SAK 35N	1	75		2.5 to 35.0	EK 35	6.0 to 35.0
23 WDU 2.5	1 or 2	15		0.22 to 2.5	WPE 2.5	1.5 to 2.5
18 WDU 4	1 or 2	21		1.5 to 4.0	WPE 4	1.5 to 4.0
18 WDU 6	1 or 2	26		1.5 to 6.0	WPE 6	1.5 to 6.0
14 WDU 10	1 or 2	37		1.5 to 10.0	WPE 10	1.5 to 10.0
14 WDU 16	1 or 2	47		1.5 to 16.0	WPE 16	1.5 to 16.0
9 WDU 35	1 or 2	75		2.5 to 35.0	WPE 35	2.5 to 35.0

- A maximum of 2 earth bars type QS9 may be supplied.
- Alternative terminal types are available.

The maximum number of terminals listed above depends on the maximum conductor size and maximum current. At least one earth terminal must be supplied.
The enclosure can be mounted with the terminal strip horizontally or vertically aligned.

Dimensions

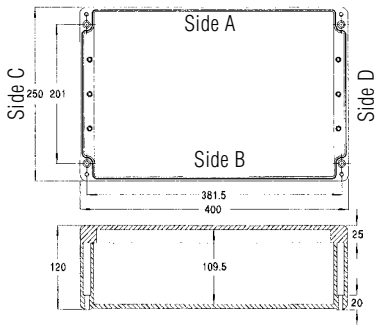

All dimensions in mm.
Fixing hole diameter 7 mm.

Entry positions

View on sides A+B

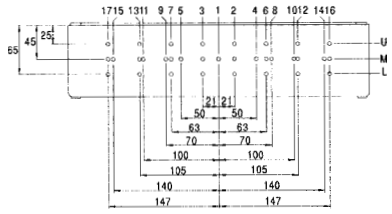

View on sides C+D

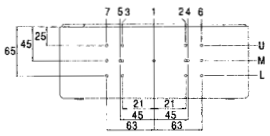

Standard entry arrangements

Thread size	Side	Max. entries per side	Position of holes
M 20	A+B	8	2M, 3M, 6M, 7M, 12M, 13M, 16M, 17M
		16	2U, 2L, 3U, 3L, 6U, 6L, 7U, 7L, 12U, 12L, 13U, 13L,16U, 16L,17U,17L
	C+D	4	2M, 3M, 6M, 7M
		8	2U, 2L, 3U, 3L, 6U, 6L, 7U, 7L
M 25	A+B	7	1M, 4M, 5M, 10M, 11M, 16M, 17M
	C+D	3	1M, 6M, 7M
M 32	A+B	5	1M, 8M, 9M, 14M, 15M
	C+D	2	4M, 5M
M 40	A+B	5	1M, 8M, 9M, 14M, 15M
	C+D	2	4M, 5M
M 50	A+B	1	1M
	C+D	1	1M

- The threaded boreholes can be different at each end.
- EEx e plug elements can be fitted, if required.

➡ Order no.: GB-400/2