SV5151

Vortex flow meter

SVR34XGXD0KG/US

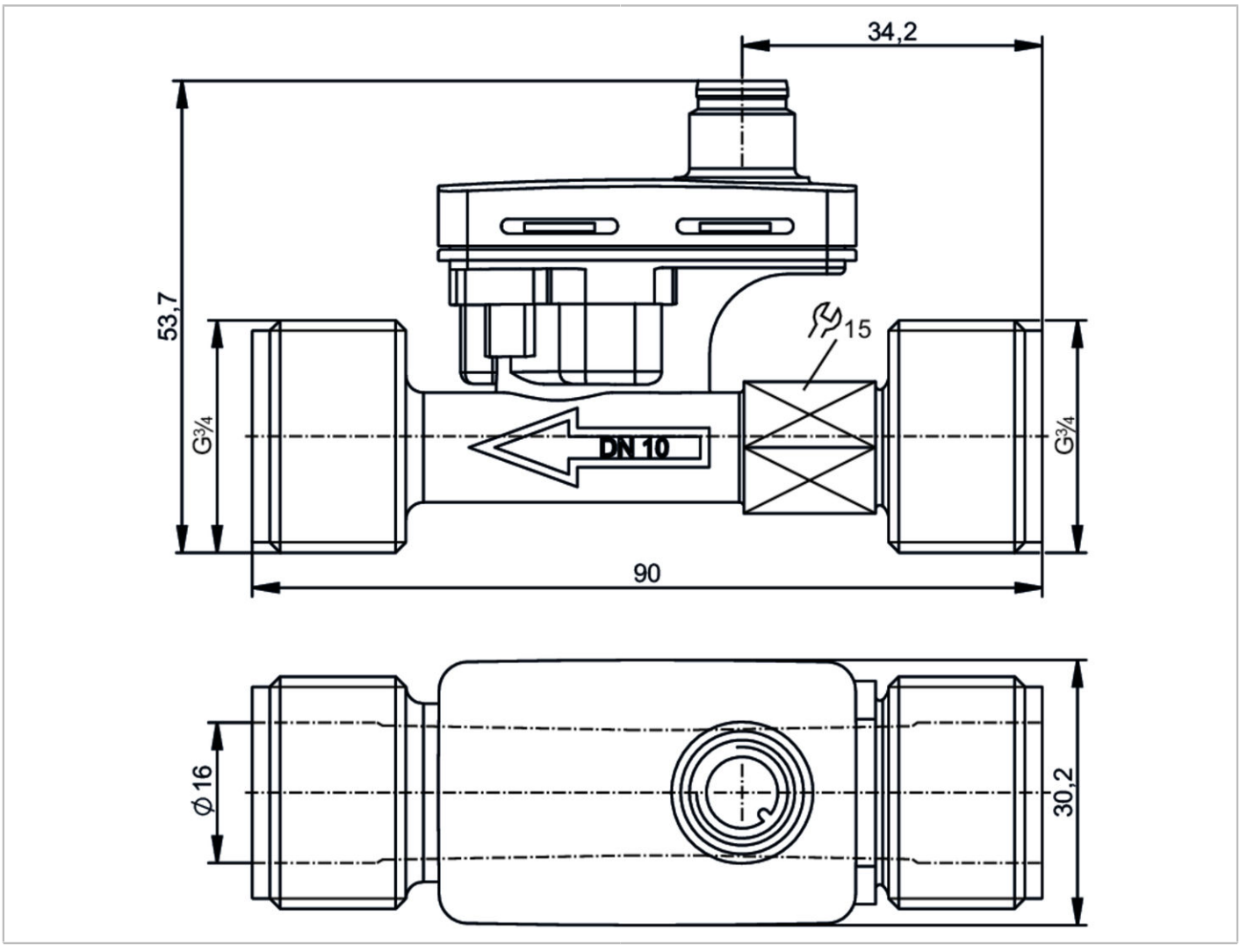

CE

Product characteristics			
Number of inputs and outputs		Number of analogue outputs: 1	
Measuring range		1.8...32 l/min	0.265...4.716 m/s
Process connection		threaded connection G 3/4 external thread DN10	
Application			
Special feature		Gold-plated contacts	
Measuring element		1 x Pt 1000; (to DIN EN 60751, class B)	
Application		for industrial applications	
Installation		connection to pipe by means of an adapter	
Media		ultra-pure water; water	
Medium temperature	[°C]	0...125	
Min. bursting pressure		15 bar	1.5 MPa
Note on min. burst pressure		125 °C	
Pressure rating		16 bar	1.6 MPa
Note on pressure rating		≤ 90 °C	

SV5151

Vortex flow meter

SVR34XGXD0KG/US

Electrical data			
Operating voltage	[V]	8...33 DC	
Current consumption	[mA]	< 5	
Min. insulation resistance	[MΩ]	100; (500 V DC)	
Protection class		III	
Power-on delay time	[s]	< 2	
Measuring principle		Vortex	
Inputs / outputs			
Number of inputs and outputs		Number of analogue outputs: 1	
Outputs			
Total number of outputs		1	
Output signal		analogue signal	
Number of analogue outputs		1	
Analogue current output	[mA]	4...20; (Q [l/min] = 2,0 x (I - 4 mA))	
Max. load	[Ω]	< (Ub - 8 V) / 20 mA; Ub = 24 V: 800	
Measuring/setting range			
Measuring range		1.8...32 l/min	0.265...4.716 m/s
Temperature monitoring			
Internal heating temperature probe		1 K/mW	
Measuring range	[°C]	0...125	
Accuracy / deviations			
Flow monitoring			
Accuracy (in the measuring range)		Q < 50 % MEW: < 1 % MEW / Q > 50 % MEW: < 2 % MW; (water)	
Repeatability		0,2; (% of the final value)	
Temperature monitoring			
Accuracy	[K]	± 0,3 ± 0,005 x T	
Response times			
Flow monitoring			
Response time	[s]	0.34; (T09)	
Temperature monitoring			
Dynamic response T05 / T09	[s]	< 10 / < 30	
Operating conditions			
Ambient temperature	[°C]	-15...85	
Note on ambient temperature		Medium temperature > 0 °C: -40...85	
Storage temperature	[°C]	-40...85	
Protection		IP 65	
Cavitation		P(absolute) discharge / P(difference) > 5.5 to avoid cavitation	
Tests / approvals			
EMC		EN IEC 61326-1:2021	
Shock resistance		DIN EN 60068-2-27	30 g (11 ms)

SV5151

Vortex flow meter

SVR34XGXD0KG/US

Vibration resistance		DIN EN 60068-2-6	with water / 10...61 Hz 1 mm
			with water / 61...2000 Hz 2 g
MTTF	[years]	395.9	
Pressure Equipment Directive		Sound engineering practice; can be used for group 2 fluids; group 1 fluids on request	

Mechanical data

Weight	[g]	82.05	
Housing		rectangular	
Dimensions	[mm]	90 x 30.2 x 53.7	
Materials		Housing: PPS 40% glass fibre; electronics: PC 10% glass fibre	
Materials (wetted parts)		sensor: PPSU; Pipe section: PPS 40% glass fibre; Sealing: EPDM	
Tightening torque	[Nm]	12	
Process connection		threaded connection G 3/4 external thread DN10	

Displays / operating elements

Display			colour display 1,44", 128 x 128 pixels
			2 x LED, yellow

Remarks

Remarks	MW = measured value	
	MEW = Final value of the measuring range	
Pack quantity	1 pcs.	

Electrical connection - plug

Connector: 1 x M12; coding: A; Contacts: gold-plated



SV5151

Vortex flow meter

SVR34XGXD0KG/US

Connection

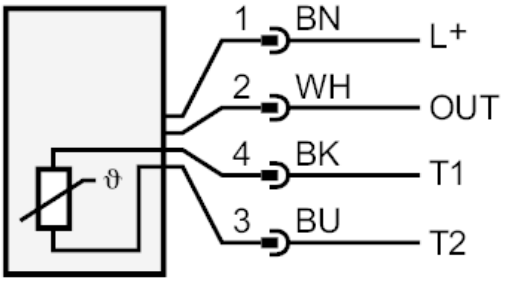

OUT:	analogue output
T1 / T2:	Pt1000
	colours to DIN EN 60947-5-2
	Core colours :
BK =	black
BN =	brown
BU =	blue
WH =	white

Diagrams and graphs

pressure rating curve

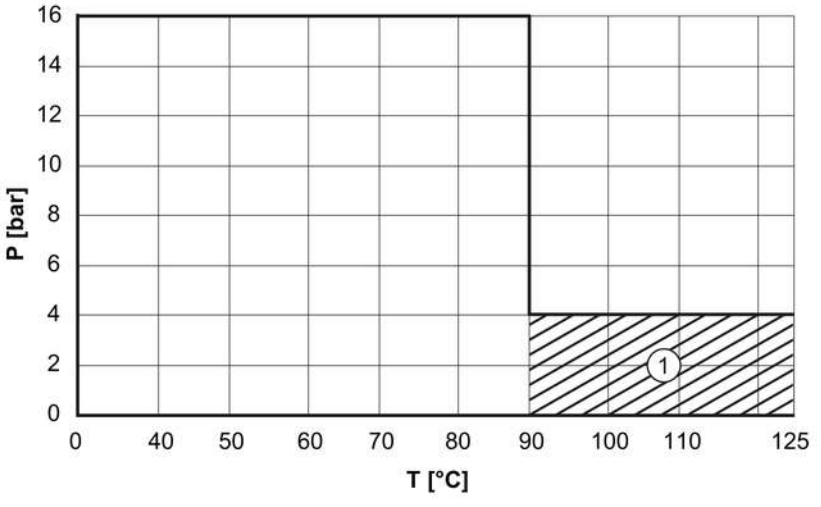

P [bar] = pressure

T [°C] = temperature

1 = permanent

SV5151

Vortex flow meter

SVR34XGXD0KG/US

Pressure loss

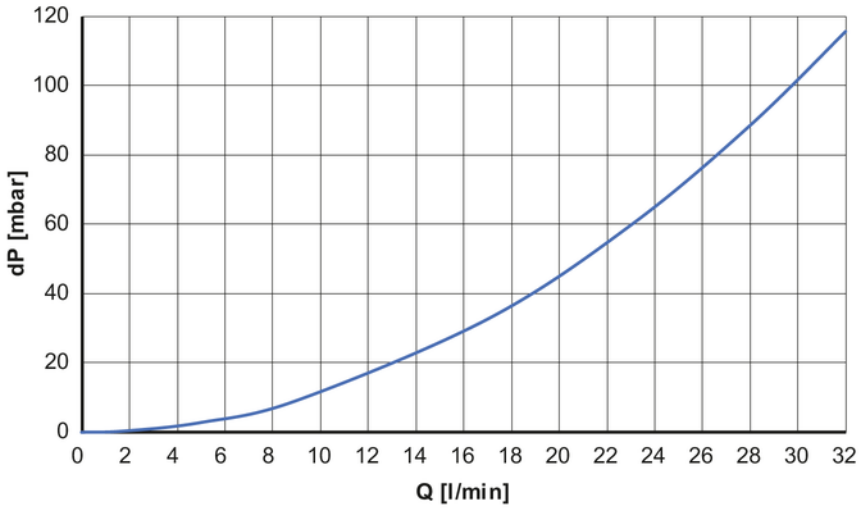

dP [mbar] = Pressure loss

Q [l/min] = volumetric flow quantity