HR702CA024

8-PIN Industrial relay with LED state indicator and mechanical actuator, 24VAC, 10A, 2 C/O contacts, fitting on socket HR7XS1



Product designation			8-PIN INDUSTRIAL RELAYS
Product type designation			HR702C
Contact characteristics			
Contact configuration			2 C/O
Rated insulation voltage Ui IEC/EN		V	250
Rated impulse withstand voltage Uimp		kV	6
IEC Conventional free air thermal current Ith		A	10
Rated current (In)		A	10
Relay control voltage		V	24VAC
Rated operating power AC-1		VA	2500
Rated operating power AC-15	230 VAC	VA	500
Single-phase motor control	230VAC	kW	1.2
Rated operating current DC-1	30V	A	10
Minimum switching load		V / mA	5 / 100
Contact impedance		mΩ	100
Contact material			Ag/Ni
Operating times			
Closing		ms	<30
Opening		ms	<30
Operations			
Mechanical life		cycles	5000000
Electrical life AC1		cycles	100000
Coil characteristics			
Average coil consumption AC at 20°C		VA	3
Average coil consumption DC at 20°C		W	1.5
Operating range	Closing	% Un	70...110
	Opening	% Un	20…55
Maximum cycle frequency		cycles/h	3600
Mechanical features			
Max socket terminal tightening torque		Nm	0.6
Socket screw tightening tool (cross / flat blade)			PH1 / 4.5mm
Conductor section			
AWG/Kcmil			
	min		20
	max		14
IEC			
	min	mm²	0.5
	max	mm²	2.5

The characteristics described in this document are subject to updates or modifications at any time. The descriptions, technical and functional information, illustrations and instructions in this brochure are purely illustrative, and are consequently not contractually binding

HR702CA024

8-PIN Industrial relay with LED state indicator and mechanical actuator, 24VAC, 10A, 2 C/O contacts, fitting on socket HR7XS1

Operating position			
	normal		Any
Fixing			On 35mm DIN rail and with screw

Ambient conditions

Temperature			
Operating temperature			
	min	°C	-40
	max	°C	+55
Storage temperature			
	min	°C	-40
	max	°C	+70

Other features

Indication	Yes
Mechanical contact position indicator	Yes
Mechanical test actuator	Yes

Dimensions

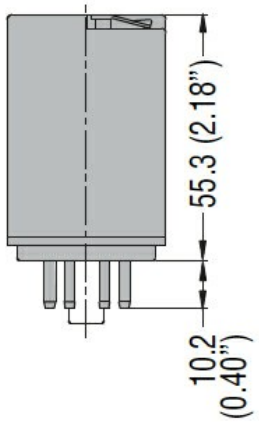

Wiring diagrams

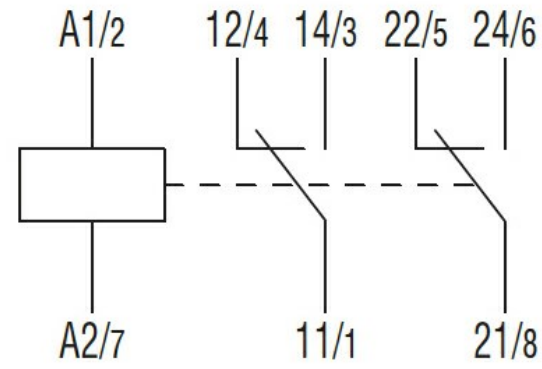

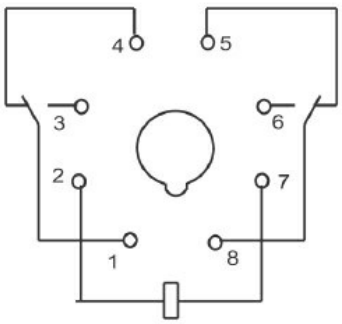

The characteristics described in this document are subject to updates or modifications at any time. The descriptions, technical and functional information, illustrations and instructions in this brochure are purely illustrative, and are consequently not contractually binding

HR702CA024

8-PIN Industrial relay with LED state indicator and mechanical actuator, 24VAC, 10A, 2 C/O contacts, fitting on socket HR7XS1

Certifications and compliance

Compliance	
	IEC/EN 61810
Certificates	
	CSA
	cURus
	EAC

ETIM classification

ETIM 8.0	EC001437 - Switching relay

The characteristics described in this document are subject to updates or modifications at any time. The descriptions, technical and functional information, illustrations and instructions in this brochure are purely illustrative, and are consequently not contractually binding