Brand of NTN corporation

Technical data

6202EEC3

Single row deep groove ball bearings



VISUAL (S)

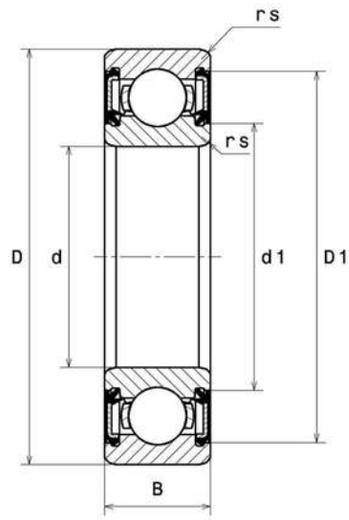

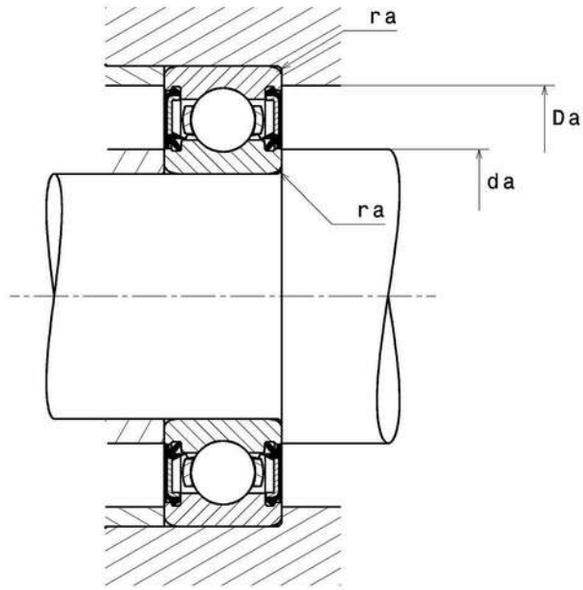

NTN Europe
1 rue des Usines · BP 2017 · 74010 Annecy Cedex · France · Tel. +33 (0)4 50 65 30 00
S.A. au capital de 322 639 919 € · RCS ANNECY B 325 821 072 · Id. Fiscale : FR 48 325 821 072
SIRET 325 821 072 00015 · Code APE 2815 Z · Code NACE 28.15

6202EEC3
Single row deep groove ball bearings

PRODUCT DEFINITION	
Brand	SNR
d - Internal diameter	15 mm
D - External diameter	35 mm
B - Bearing/Inner ring width	11 mm
d1 - External diameter inner ring	19,7 mm
D1 - Inner diameter outer ring	30,9 mm
rs - Min fillet radius	0,6 mm
Radial clearance class	C3
Mass	0,045 kg

PRODUCT PERFORMANCE	
C - Dynamic load	8,2 kN
C0 - Static load	3,6 kN
Cu - Fatigue limit load	0,16 kN
f0 - Coefficient	12.7
Nlim - Mechanical Limit Speed	15000 tr/min
Tmin - Min operating temperature	-30 °C
Tmax - Max operating temperature	120 °C

BEARING FREQUENCIES	
BPFO - Characteristic outer ring frequency (60 rpm)	2.611 Hz
BPFI - Characteristic inner ring frequency (60 rpm)	4.389 Hz
FTF - Characteristic cage frequency (60 rpm)	0.373 Hz
BSF - Characteristic rolling element frequency (60 rpm)	3.683 Hz

6202EEC3
Single row deep groove ball bearings

ABUTMENT	
da min - Min shoulder diameter IR	19 mm
da max - Max shoulder diameter IR	19,7 mm
Da max - Max shoulder diameter OR	31 mm
ra max - Max shaft & housing fillet radius	0,6 mm

INDUSTRY CALCUL FACTORS

Equivalent dynamic radial load

P = X.Fr + Y.Fa

$\frac{f_0 F_a}{C_0}$	e	Fa / Fr ≤ e		Fa / Fr > e	
		X	Y	X	Y
0.172	0.19	1	0	0.56	2.3
0.345	0.22				1.99
0.689	0.26				1.71
1.03	0.28				1.55
1.38	0.3				1.45
2.07	0.34				1.31
3.45	0.38				1.15
5.17	0.42				1.04
6.89	0.44				1

Equivalent static radial load

Po = Xo.Fr + Yo.Fa

X_0	Y_0
0.6	0.5

For single or DT bearing arrangement :

If Po <Fr, then use Po = Fr