Maxi free-standing Beacons / Rotating Mirror Light 883

Rotating Mirror Beacon LED 24VAC/DC RD



Part No.: 883.130.75

CE RoHS

MECHANICAL DATA	
Height	218 mm
Diameter	142 mm
Materials	PC PC/ABS
Dome colour	Red
Housing colour	Black
Protection category	IP65
Connection	Screw terminals
cross-sectional area maximum	1,50mm² / 16AWG
Cable entry	Rubber pinch
Cable entry minimum	d = 5 mm
Cable entry maximum	d = 7 mm
Tension relief	Pull-out protection
Type of fixing	Base mounting
Working temperature minimum	-30°C
Working temperature maximum	+50°C
Weight with packaging	715 g
Product weight	627 g

ELECTRICAL DATA	
Operating voltage	24V
Operating voltage type	AC/DC
Operating voltage frequency	50Hz
Operating voltage tolerance	+/- 10%
Rated operational voltage	24 VDC
Rated operational current	250 mA
Rated inrush current	2400 mA
Protection class	Protection class 2
Pollution degree	3
Overvoltage category	II

OPTICAL DATA	
Light source	LED
Light colour	Red
Optical signal image	Revolving
Service life optical	50,000 h minimum
Rotation speed (rpm)	180 U/min

! For additional installation and mounting information, refer to the appropriate user guide at www.werma.com. This printed copy is for information only and is subject to alteration.

Maxi free-standing Beacons / Rotating Mirror Light 883

Rotating Mirror Beacon LED 24VAC/DC RD

DRAWING

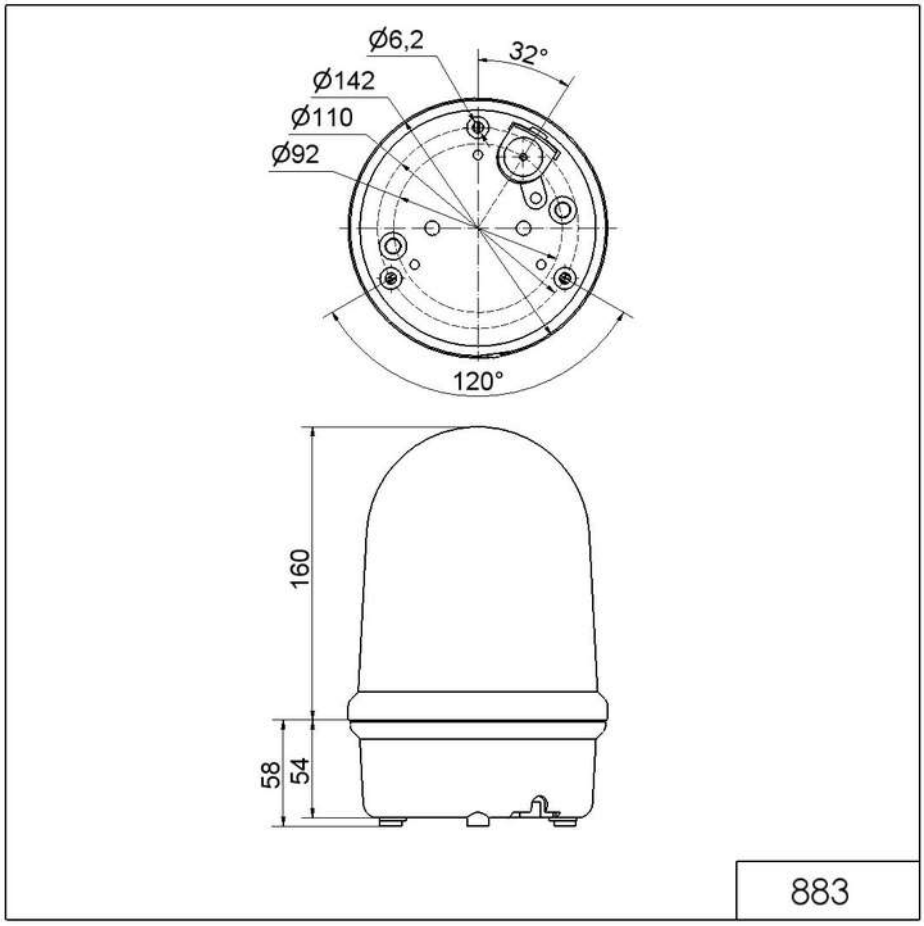

! For additional installation and mounting information, refer to the appropriate user guide at www.werma.com. This printed copy is for information only and is subject to alteration.