Side View of Assembly

SECTION A-A

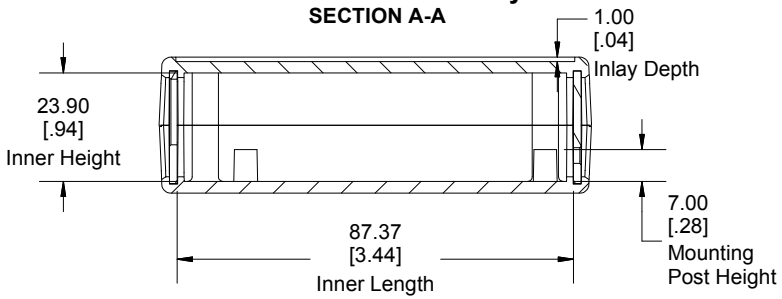

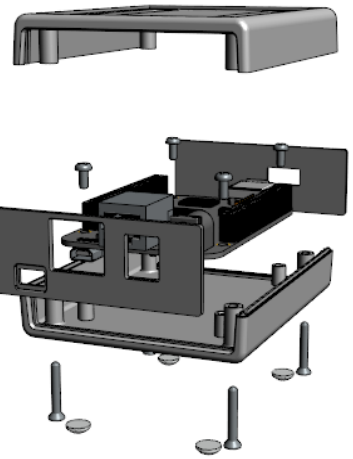

End View of Assembly

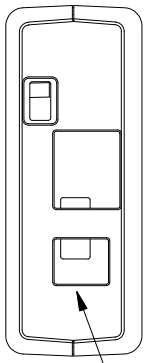

Top View of Assembly

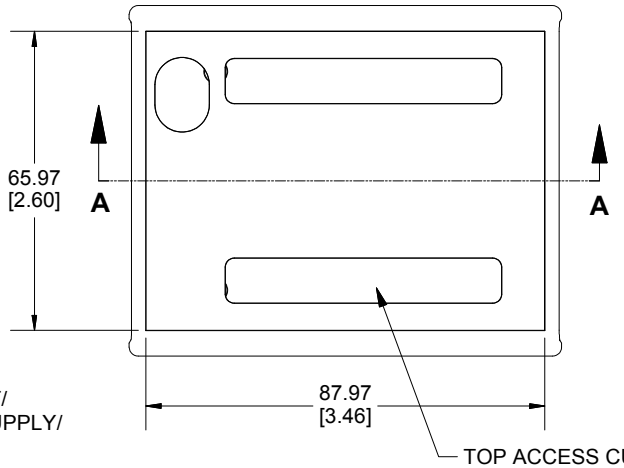

End View of Assembly

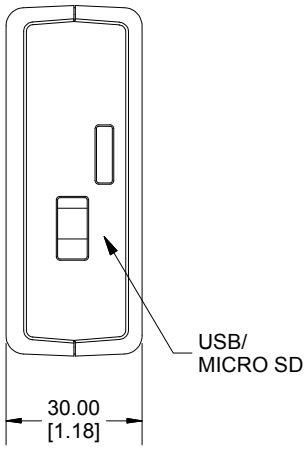

Bottom View of Assembly

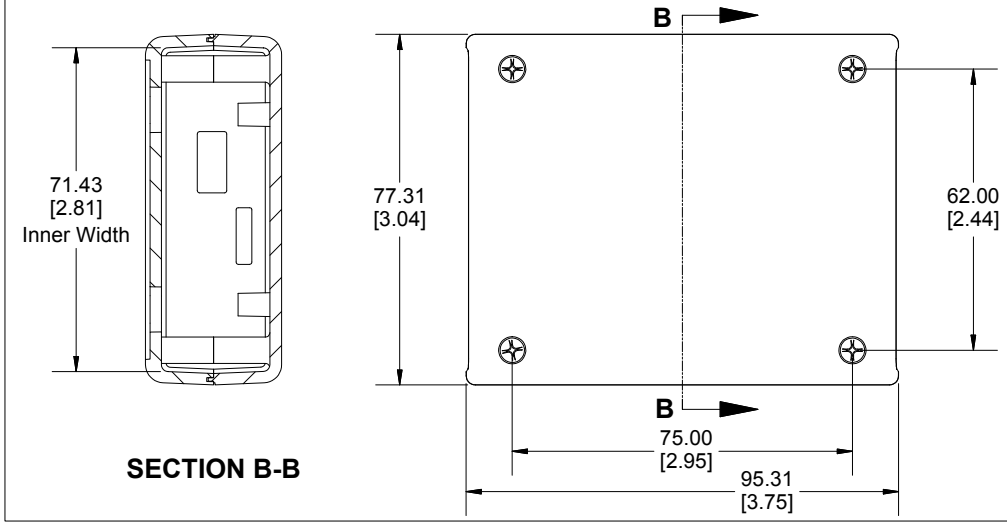

SECTION B-B

NOTE
Purchased assembly includes top and bottom cover, front and rear end panels, 4 cover screws, 4 PCB screws and 4 clear rubber feet. (P.C. Board not included) Enclosure molded from ABS Plastic.

PART NUMBERS	
1593HAMDOG Enclosure	
Black Enclosure	1593HAMDOGBK
Grey Enclosure	1593HAMDOGGY
Translucent Blue Enclosure	1593HAMDOGTBU

Dimensions:
mm
[inches]

HAMMOND MANUFACTURING™

1593HAMDOG

www.hammondmfg.com