Deep groove ball bearings

6208-2RSR (Series 62..-2RSR)

main dimensions to DIN 625-1, lip seals on both sides

The datasheet is only an overview of dimensions and basic load ratings of the selected product. Please always observe all the guidelines in these overview pages. Further information is given on many products under the menu item "Description". You can also order comprehensive information via the Catalogue selection system (http://www.fag.de/content.fag.de/en/mediathek/library/library.jsp) or by telephone on +49 (91 32) 82 - 28 97.

d	40	mm	
D	80	mm	
B	18	mm	
d_1	53	mm	
D_2	70,4	mm	
$D_{a\ max}$	73	mm	
$d_{a\ min}$	47	mm	
$r_{a\ max}$	1	mm	
r_{min}	1,1	mm	
m	0,384	kg	Mass
C_r	31000	N	Basic dynamic load rating, radial
C_{0r}	17800	N	Basic static load rating, radial
n_G	5000	1/min	Limiting speed
C_{ur}	900	N	Fatigue limit load, radial

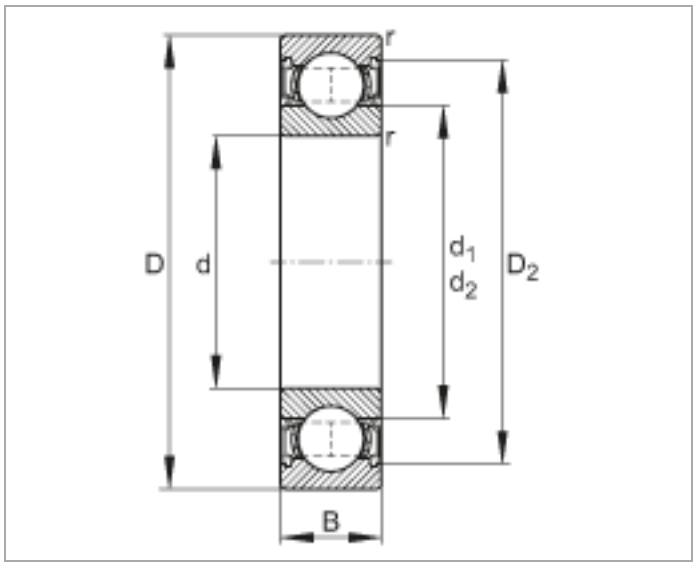
r
r
D
d
d1
d2
D2
B

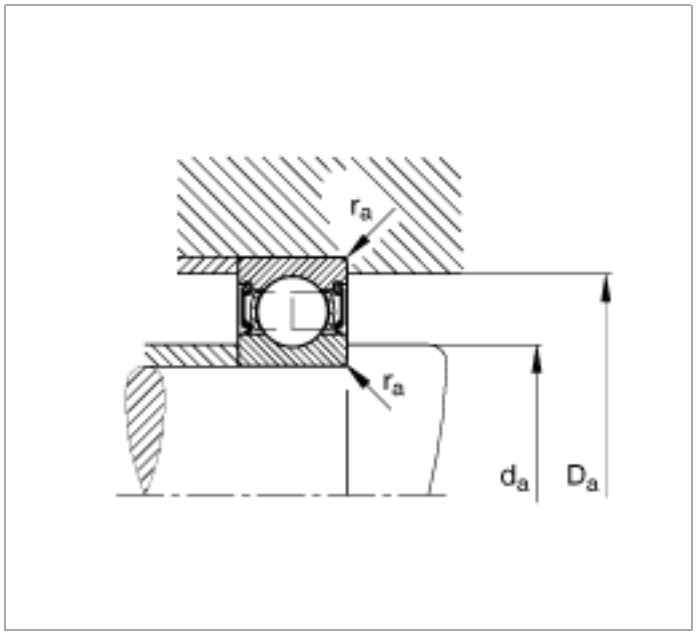
ra
ra
da
Da