# EVF567

## Wirable plug

SSTGH040VASFKPG

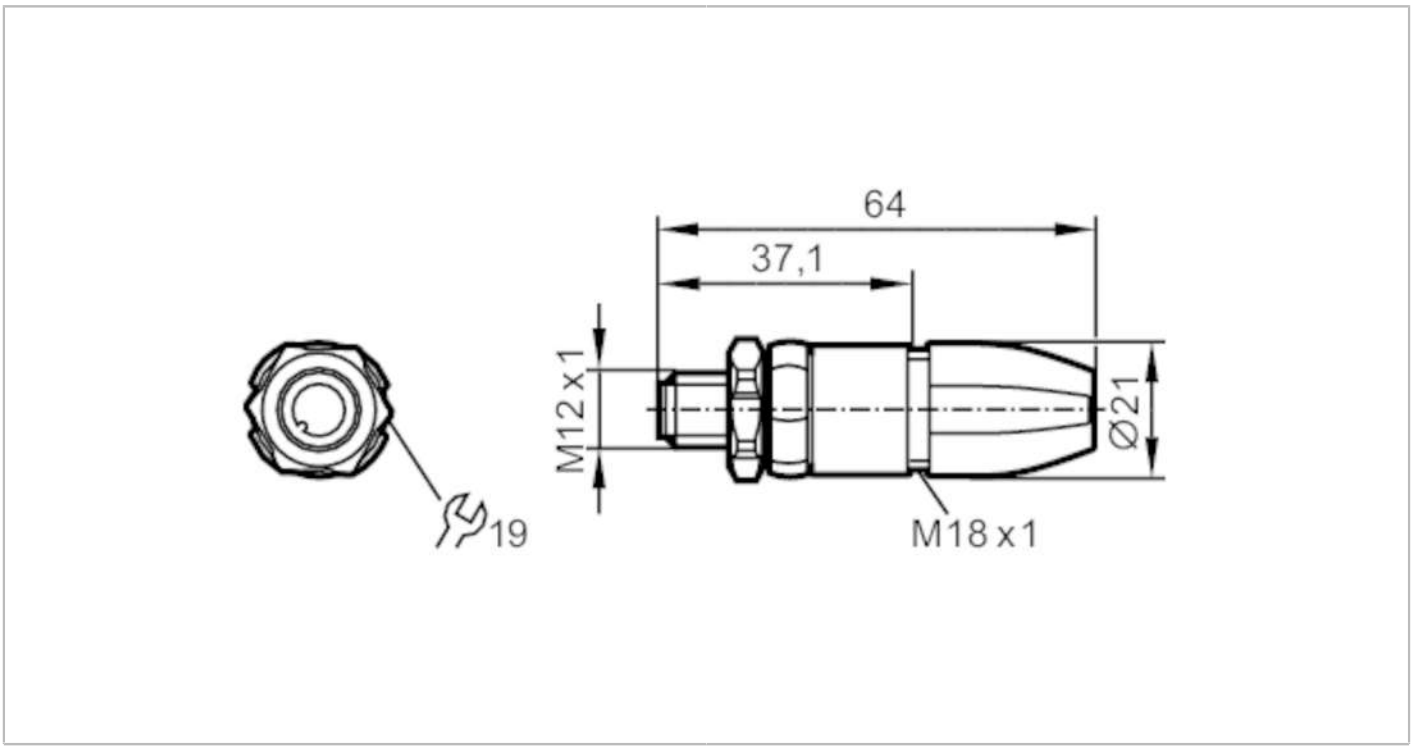


| | | |
|---|---|---|
| **Application** | | |
| Special feature | | Free from silicone; Gold-plated contacts |
| Application | | hygienic and wet areas in the food industry |
| Free from silicone | | yes |
| **Electrical data** | | |
| Operating voltage | [V] | < 250 AC / < 300 DC |
| Protection class | | II |
| Max. current load total | [A] | 4;  (...40 °C) |
| **Operating conditions** | | |
| Ambient temperature | [°C] | -25...100 |
| Storage temperature | [°C] | -25...55 |
| Storage humidity | [%] | 10...100 |
| Other climatic conditions for storage according to stated class | | 1K22/ DIN 60721-3-1 |
| Protection | | IP 65; IP 67; IP 68; IP 69K |
| **Mechanical data** | | |
| Weight | [g] | 31.7 |
| Moulded-body material | | PA 6.6 |
| Material nut | | stainless steel (1.4404 / 316L) |
| Sealing material | | EPDM |
| **Remarks** | | |
| Pack quantity | | 1 pcs. |

# EVF567

## Wirable plug

SSTGH040VASFKPG

### Electrical connection

screw terminals: 0.25...1 mm²; Cable sheath: Ø 3.5...6 mm; AWG 23...17

### Electrical connection - plug

Connector: 1 x M12, straight; coding: A; Moulded body: PA 6.6, grey; Locking: stainless steel (1.4404 / 316L); Sealing: EPDM; Contacts: gold-plated; Tightening torque: 0.6...1.2 Nm; Take into account the maximum value of the counterpart!




### Connection

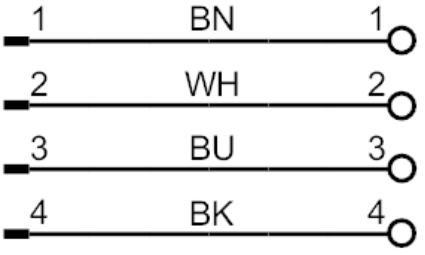


| | Core colours |
|---|---|
| BK | black |
| BN | brown |
| BU | blue |
| WH | white |
| | colours to DIN EN 60947-5-2 |