# COMBINATION WRENCHES - METRIC | E113211



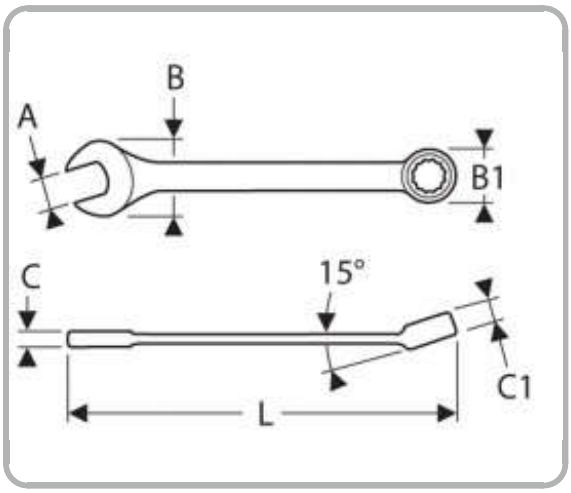


## Description

- ISO 691 - ISO 1711-1 - ISO 3318 - ISO 7738 - DIN 3113
- 12-point OGV® ring angled at 15°.
- Open end angled at 15° from handle axis.
- OGV® profile maximizing the contact surface with the nut for a longer lifetime.
- Forged in Chrome Vanadium steel.
- High chrome finish.

## Information

| | |
|---|---|
| **EAN** | 3258951132111 |
| **A [mm]** | 16 |
| **B [mm]** | 36 |
| **B1 [mm]** | 24.8 |
| **C [mm]** | 5.8 |
| **C1 [mm]** | 9 |
| **L [mm]** | 200 |
| **Conditioning** | 1 |
| **[g]** | 110 |