POWERSWITCH
Solid-State Contactor With Analogue Input
For Pulsed Output BF 9250/0_2

DOLD

0248829

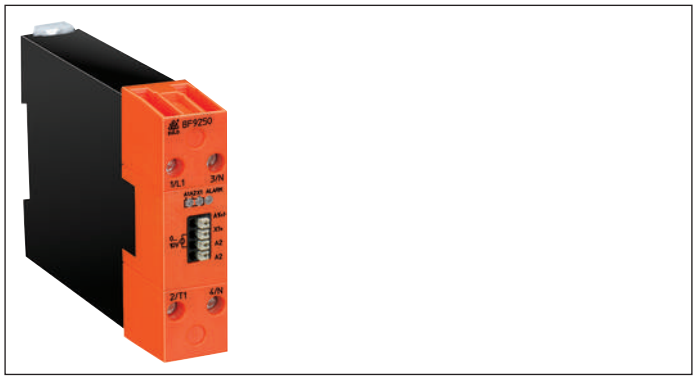

- According to IEC/EN 60947-4-2, IEC/EN 60947-4-3
- Analogue controller for accurate process temperature control
- Burst firing control of heaters
- Control input optional with DC 0 ... 10 V, DC 4 ... 20 mA, 0 ... 10 kΩ
- Reverse action operation possible
- Rated operational voltage range up to 480 V
- Rated operational current is up to AC 50 A
- Zero cross switching
- Protected by varistors
- Temperature protection of the power semiconductors
- LED indications for supply, output status and alarm status
- Alarm indication on mains synchronisation failure
- Alarm indication on control input failure
- Alarm indication on over temperature of power semiconductors
- DIN-rail mountable
- BF 9250/0_2 to 10 A: Width 22.5 mm
  BF 9250/0_2 to 25 A: Width 45 mm
  BF 9250/0_2 to 50 A: Width 90 mm

Block Diagram

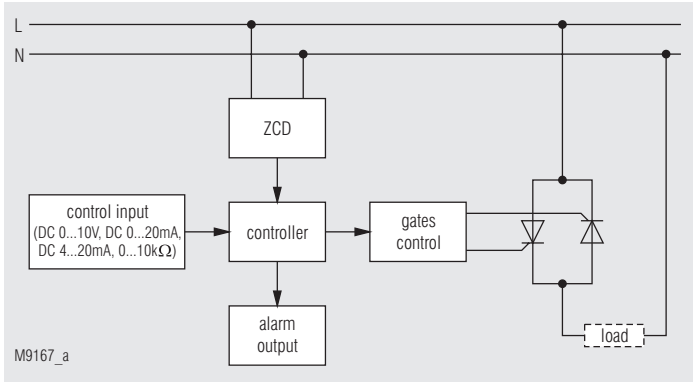

Circuit Diagrams

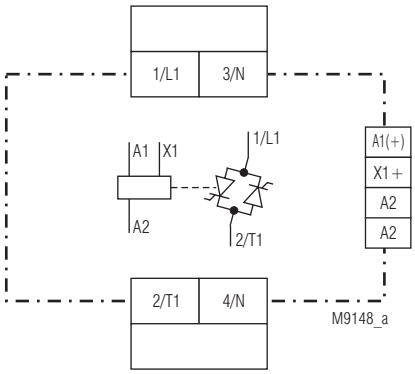

Connection Terminals

Terminal Designation	Signal Designation
A1 (+)	+ / L
A2	- / N
X1	Control input
L1, N	Mains connection
T1, N	Load output

Approvals and Markings

CE c UL US LISTED
Canada / USA

Applications

- Analogue control for precise temperatur control
- Fast and noiseless switching of heating elements

Indicators

Normal operation

Green LED:	ON
Yellow LED:	ON according to output status
Red LED:	OFF

Mains sychronisation failure alarm

Green LED:	Flashing
Yellow LED:	OFF
Red LED:	Flashing

(This alarm status is not latched)

Control input failure

Green LED:	ON
Yellow LED:	OFF
Red LED:	Flashing

(This alarm status is not latched)

Over temperature of power semiconductors alarm

Green LED:	ON
Yellow LED:	OFF
Red LED:	ON

(This alarm status is latched. Supply on A1+/A2 has to be switched off and back on after a short time to reset this status)

All technical data in this list relate to the state at the moment of edition. We reserve the right for technical improvements and changes at any time.

Technical Data

Input

Supply voltage U_H
A1/A2: AC/DC 24 V
Supply current: < 26 mA at DC 24 V

Control Input

Current controlled input
Control current range: DC 0 ... 20 mA or DC 4 ... 20 mA
Allowable input current: < 35 mA
Over current protection: YES
Alarm for over current: YES
Reverse polarity protection: YES
Voltage drop: 1.02 V at 20 mA

Voltage controlled input

Control voltage range: DC 0 ... 5 V or DC 0 ... 10 V
Control input current: < 0.01 mA at DC 10 V

Potentiometer controlled input
Potentiometer value: 10 kΩ ±10 %

Control accuracy
Range: 0 ... 100 %
Step: 1.5625 %

Output

Rated load voltage range: AC 24 ... 115 V; AC 110 ... 240 V or AC 230 ... 480 V
Load current I_L: AC 10 A, 25 A, 50 A
Minimum operational current: AC 40 mA
Operating mode: Continuous
Current reduction over 40°C
I_L AC 10 A: 0.2 A / °C
I_L AC 25 A: 0.4 A / °C
I_L AC 50 A: 0.6 A / °C
Freqency range: 45 ... 65 Hz
Varistor voltage: AC 510 V
Load types: Resistive
Power loss: 1.2 (V) x I_L (A) approx.
Average power output: 0 ... 100 %
Output power resolution
at BF 9250/002: 1.5625 %
at BF 9250/042: 5 %
Zero crossing detection: YES
Off state leakage current at rated voltage and frequency: 1.0 mA (T_j = 125°C max.)
I^2t for fusing t = 1 to 10 ms
I_L AC 10 A, 25 A: 800 A^2s
I_L AC 50 A: 1800 A^2s
Peak inverse voltage: ±1200 V_P

Note: Higher current capacilities on request

Installation

Recommended distance with max. load current and 100 % duty cycle upper / lower side
to cable duct: 20 mm
left / right: 10 mm

Technical Data

General Data

Maximum humidity: 75 %, no condensation
Operating temperature: 0 ... 40 °C
Maximum temperature: 60° (using appropriate derating)
Storage temperature: - 20 ... + 80 °C
Cooling: Natural convection
Junction temperature: < 125 °C
Rated withstand voltage input to output: 3500 V
Degree of protection
Housing: IP 40 IEC/EN 60529
Terminals: IP 20 IEC/EN 60529
Mounting: DIN rail IEC/EN 60715
Wire fixing
Wire connection DIN 46228-1/-2/-3/-4
Load terminals: 1 x 10 mm^2 solid
1 x 6 mm^2 stranded ferruled
Control terminals: 1 x 0.75 mm^2 stranded ferruled (isolated) DIN 46228-1/-2/-3/-4
1 x 1.5 mm^2 stranded ferruled DIN 46228-1/-2/-3
Load terminals: box terminals
Control terminals: cage clamp terminals “Push-In”
Fixing torque: 1.2 Nm
Weight
BF 9250/0_2 to 10 A: 350 g
BF 9250/0_2 to 25 A: 580 g
BF 9250/0_2 to 50 A: 1094 g

Dimensions

Width x height x depth
BF 9250/0_2 to 10 A: Width 22,5 x 85 x 120 mm
BF 9250/0_2 to 25 A: Width 45 x 85 x 120 mm
BF 9250/0_2 to 50 A: Width 90 x 85 x 120 mm

UL-Data according to UL508

Input
Wire connection: 60°C / 75°C copper conductors only AWG 28 - 14 Sol/Str

Control input
Current input: DC 4 ... 20 mA
Voltage input: DC 0 ... 5 V bzw. DC 0 ... 10 V
Potentiometer input: 10 kOhm ± 10 %

Load circuit
Fixed screw terminal: 75°C copper conductors only
AWG 18 - 8 Sol Torque 0.8 Nm or
AWG 18 - 10 Str Torque 0.8 Nm
(only possible at variants up to 30 A)

Temperature range: 0 ... 40 °C

Frequency range: 50 / 60 Hz

Pollution degree: 2

In the final circuit an overvoltage protector R/CSPD (VZCA2/8) with min. 480V AC, 50/60Hz, VPR=2500V, Type 3 has to be installed.

Technical data that is not stated in the UL-Data, can be found in the technical data section.

Standard Type

BF 9250.91/042 U_H AC/DC 24 V DC 0 ... 10 V AC 230 ... 480 V AC 10 A
Article number: 0059168
- 1-pole
- Control input: DC 0 ... 10 V
- Auxiliary voltage: AC/DC 24 V
- Load voltage: AC 230 ... 480 V
- Load current: AC 10 A
- Width: 22.5 mm

Variants

BF 9250/002: Output control with fixed period of 64 cycles, pulse-space ratio according to input signal
BF 9250/042: Self optimising, to achieve as short as possible control periods, suitable for infrared lamps

Characteristics

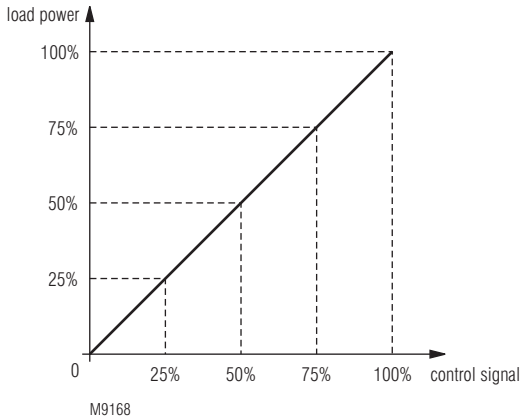

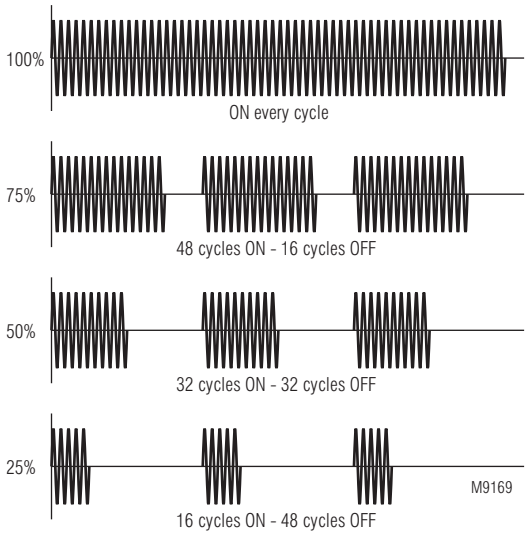

Variant BF 9250/002

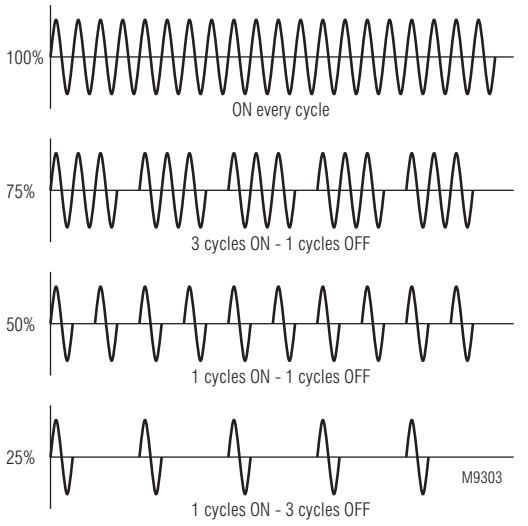

Variant BF 9250/042

Application Examples

