

On-Off switch, +housing, 6p+1N/O+1N/C, Ie=63A, FS 0-1, 90°, 88x88 mm

Part no. T5B-4-15682/I4
Article no. 207229
Catalog No. CT44-15682-I4KBQ

Delivery programme

Product range			On-Off switch
Part group reference			T5B
			with black thumb grip and front plate
Main circuits Poles			6
Auxiliary contacts			
		N/O	1
		B	1
Locking facility			Not lockable
Degree of Protection			IP65
			totally insulated
Design			surface mounting
			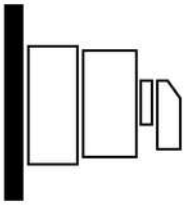
Contact sequence			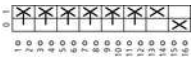
Motor rating AC-23A, 50 - 60 Hz			
400 V	P	kW	22
Rated uninterrupted current	I_u	A	63

Approvals

Product Standards	UL 508; CSA-C22.2 No. 14-05; CSA-C22.2 No. 94; IEC/EN 60947-3; CE marking
UL File No.	E36332
UL Category Control No.	NLRV
CSA File No.	12528
CSA Class No.	3211-07
North America Certification	UL listed, CSA certified
Specially designed for North America	Yes, in combination with "+NA-I4" (105868)
Suitable for	Branch circuits, suitable as motor disconnect
Degree of Protection	IEC: IP65; UL/CSA Type 1, 3R, 12, 13

General

Standards			IEC/EN 60947, VDE 0660, IEC/EN 60204, CSA, UL Switch-disconnector according to IEC/EN 60947-3
Climatic proofing			Damp heat, constant, to IEC 60068-2-78 Damp heat, cyclic, to IEC 60068-2-30
Ambient temperature		°C	
Enclosed		°C	-25 - +40
Overvoltage category/pollution degree			III/3
Rated impulse withstand voltage	U_{imp}	V AC	6000
Mechanical shock resistance		g	15
Mounting position			As required
Protection against direct contact when actuated from front (EN 50274)			Finger and back-of-hand proof

Contacts

Mechanical variables			
Main circuits Poles			6
Auxiliary contacts			
		N/O	1
		B	1
Electrical characteristics			
Rated operational voltage	U_e	V AC	690
Rated uninterrupted current	I_u	A	63
Note on rated uninterrupted current $!_u$			Rated uninterrupted current Iu is specified for max. cross-section.
Load rating with intermittent operation, class 12			
AB 25 % DF		x I_e	2
AB 40 % DF		x I_e	1.6
AB 60 % DF		x I_e	1.3
Short-circuit rating			
Fuse		A gG/gL	80
Rated short-time withstand current (1 s current)	I_{cw}	A_{rms}	1300
Note on rated short-time withstand current Icw			Current for a time of 1 second

Switching capacity

cos φ rated making capacity as per IEC 60947-3		A	800
Rated breaking capacity cos φ to IEC 60947-3		A	
230 V		A	520
400/415 V		A	600
500 V		A	480
690 V		A	340
Safe isolation to EN 61140			
between the contacts		V AC	440
Current heat loss per contact at I_e		W	4.5
Current heat loss per auxiliary circuit at I_e (AC-15/230 V)		CO	4.5
Lifespan, mechanical	Operations	x 10^6	> 0.5
Maximum operating frequency	Operations/h		1200
AC			
AC-3			
Rating, motor load switch	P	kW	
220 V 230 V	P	kW	15
230 V Star-delta	P	kW	22
400 V 415 V	P	kW	22
400 V Star-delta	P	kW	37
500 V	P	kW	22
500 V Star-delta	P	kW	37
690 V	P	kW	22
690 V Star-delta	P	kW	37
Rated operational current motor load switch			

230 V	I_e	A	51
230 V star-delta	I_e	A	51
400V 415 V	I_e	A	41
400 V star-delta	I_e	A	41
500 V	I_e	A	33
500 V star-delta	I_e	A	33
690 V	I_e	A	17
690 V star-delta	I_e	A	17
AC-15			
Rated operational current control switch			
230 V	I_e	A	16
400 V 415 V	I_e	A	6
500 V	I_e	A	4
AC-21A			
Rated operational current switch			
440 V	I_e	A	63
AC-23A			
Motor rating AC-23A, 50 - 60 Hz	P	kW	
230 V	P	kW	15
400 V 415 V	P	kW	22
500 V	P	kW	22
690 V	P	kW	22
Rated operational current motor load switch			
230 V	I_e	A	63
DC			
DC-1, Load-break switches L/R = 1 ms			
Rated operational current	I_e	A	63
Voltage per contact pair in series		V	60
DC-23A, motor load switch L/R = 15 ms			
24 V			
Rated operational current	I_e	A	50
Contacts		Quantity	1
48 V			
Rated operational current	I_e	A	50
Contacts		Quantity	2
60 V			
Rated operational current	I_e	A	50
Contacts		Quantity	3
120 V			
Rated operational current	I_e	A	25
Contacts		Quantity	3
240 V			
Rated operational current	I_e	A	20
Contacts		Quantity	6
DC-13, Control switches L/R = 50 ms			
Rated operational current	I_e	A	25
Voltage per contact pair in series		V	24
Control circuit reliability at 24 V DC, 10 mA	Fault probability	H_F	$< 10^{-5}$, < 1 fault in 100000 operations

Terminal capacities

Solid or stranded		mm^2	1 x (2,5 - 35) 2 x (2,5 - 16)
Flexible with ferrules to DIN 46228		mm^2	1 x (1 - 25) 2 x (1.5 - 10)
Terminal screw			M6

Max. tightening torque	Nm	4

Technical safety parameters:

Notes		$B10_d$ values as per EN ISO 13849-1, table C1

Technical data ETIM 5.0

Low-voltage industrial components (EG000017) / Switch disconnector (EC000216)

Electric engineering, automation, process control engineering / Low-voltage switch technology / Off-load switch, circuit breaker, control switch / Switch disconnector (ecl@ss8-27-37-14-03 [AKF060009])

Version as switch disconnector compact		No
Version as main switch		No
Version as maintenance-/service switch		No
Version as safety switch		No
Version as emergency stop installation		No
Max. rated operation voltage Ue AC	V	690
Rated permanent current Iu	A	63
Rated operation power AC-3, 400 V	kW	22
Rated operation power at AC-23, 400 V	kW	22
Conditioned rated short-circuit current Iq	kA	0
Number of poles		6
Number of auxiliary contacts as normally closed contact		1
Number of auxiliary contacts as normally open contact		1
Number of auxiliary contacts as change-over contact		0
Motor drive optional		No
Motor drive integrated		No
Voltage release optional		No
Device construction		Complete device in housing
Suitable for ground mounting		Yes
Suitable for front mounting		No
Suitable for front mounting center		No
Suitable for distribution board installation		No
Suitable for intermediate mounting		No
Type of control element		Toggle
Interlockable		No
Connection type main current circuit		Screw connection
Degree of protection (IP), front side		IP65

Dimensions

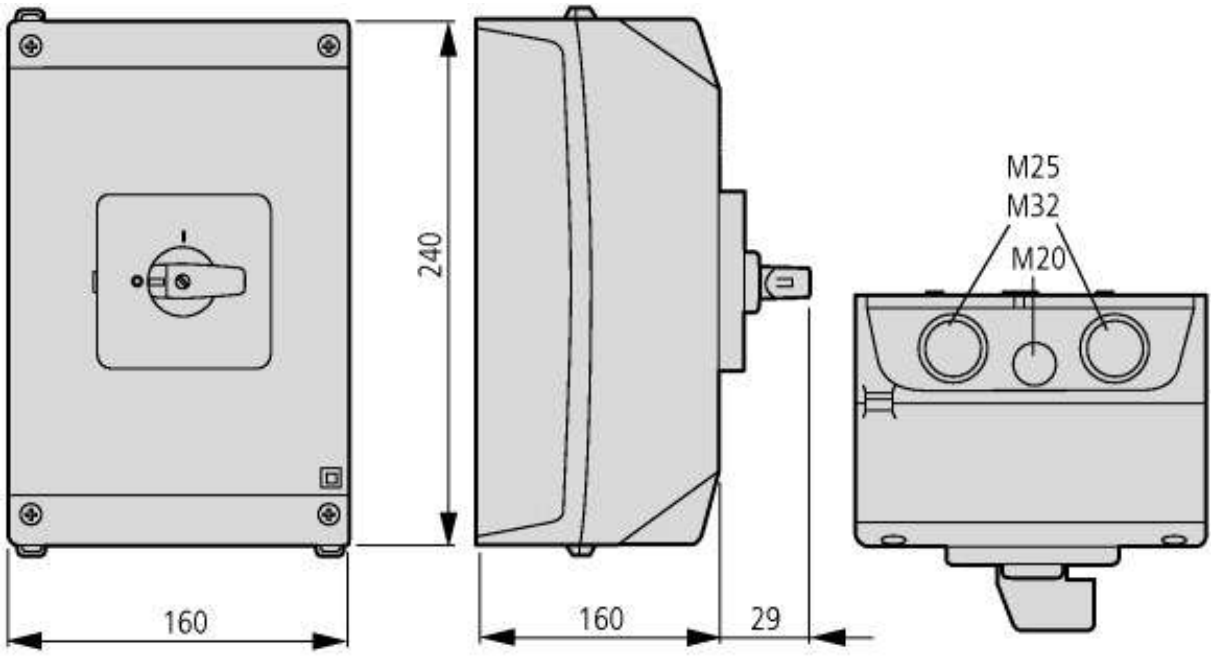

Cam switches T5B and T5 are of identical design, only their contacts are different

Additional product information (links)

IL03801009Z (AWA1150-1692) Cam switch: switch-disconnector	
IL03801009Z (AWA1150-1692) Cam switch: switch-disconnector	ftp://ftp.moeller.net/DOCUMENTATION/AWA_INSTRUCTIONS/IL03801009Z2011_06.pdf
IL03801009Z (AWA1150-1692) Cam switch: switch-disconnector	ftp://ftp.moeller.net/DOCUMENTATION/AWA_INSTRUCTIONS/IL03801009Z2014_08.pdf
Form for ordering non-standard front plates	http://ecat.moeller.net/flip-cat/?edition=HPLEN&startpage=4.87
Display flip catalog page.	http://ecat.moeller.net/flip-cat/?edition=K115A&startpage=41
Technical overview cam switch, switch-disconnector	http://de.ecat.moeller.net/flip-cat/?edition=HPLTEv1&startpage=4.2
System overview cam switch T	http://de.ecat.moeller.net/flip-cat/?edition=HPLTEv1&startpage=4.4
System overview switch-disconnector P	http://de.ecat.moeller.net/flip-cat/?edition=HPLTEv1&startpage=4.6
Key to part numbers Cam switch	http://de.ecat.moeller.net/flip-cat/?edition=HPLTEv1&startpage=4.8
Key to part numbers Switch-disconnector	http://de.ecat.moeller.net/flip-cat/?edition=HPLTEv1&startpage=4.8
UL/CSA: Rating data for approved types	http://ecat.moeller.net/flip-cat/?edition=HPLTF&startpage=4.98

© 09/2014 by Eaton Industries GmbH