# Product datasheet

Specifications



## inductive sensor XS6 M30 - L74mm - brass - Sn22mm - 12..48VDC - M12

XS630B4PBM12

XS630B4PBM12 has not been replaced. Please contact your customer care centre for more information.

Discontinued

## Main

| | |
|---|---|
| **Range of product** | Telemecanique Inductive proximity sensors XS |
| **Series name** | General purpose |
| **Sensor type** | Inductive proximity sensor |
| **Device application** | Mobile equipment |
| **Sensor name** | XS6 |
| **Sensor design** | Cylindrical M30 |
| **Size** | 74 mm |
| **Body type** | Fixed |
| **Detector flush mounting acceptance** | Non flush mountable |
| **Material** | Metal |
| **Type of output signal** | Discrete |
| **Wiring technique** | 3-wire |
| **[Sn] nominal sensing distance** | 22 mm |
| **Discrete output function** | 1 NC |
| **Output circuit type** | DC |
| **Discrete output type** | PNP |
| **Electrical connection** | Male connector M12, 4 pins |
| **[Us] rated supply voltage** | 12...48 V DC with reverse polarity protection |
| **Switching capacity in mA** | <= 200 mA DC with overload and short-circuit protection |
| **IP degree of protection** | IP67 conforming to IEC 60529<br>IP69K conforming to DIN 40050 |

## Complementary

| | |
|---|---|
| **Thread type** | M30 x 1.5 |
| **Detection face** | Frontal |
| **Front material** | PPS |
| **Enclosure material** | Nickel plated brass |
| **Sensing range** | > 15...40 mm |

Disclaimer: This documentation is not intended as a substitute for and is not to be used for determining suitability or reliability of these products for specific user applications

| | |
|---|---|
| **Operating zone** | 0…17.6 mm |
| **Differential travel** | 1...15% of Sr |
| **Status LED** | Output state: 1 LED (yellow) |
| **Supply voltage limits** | 10…58 V DC |
| **Switching frequency** | <= 500 Hz DC |
| **Maximum voltage drop** | <2 V (closed) |
| **Current consumption** | <= 10 mA no-load |
| **Maximum delay first up** | 10 ms |
| **Maximum delay response** | 0.6 ms |
| **Maximum delay recovery** | 1.4 ms |
| **Marking** | CE |
| **Threaded length** | 41 mm |
| **Length** | 74 mm |
| **Net weight** | 0.145 kg |

## Environment

| | |
|---|---|
| **Product certifications** | E2<br>UL<br>CSA |
| **Ambient air temperature for operation** | -25…70 °C |
| **Ambient air temperature for storage** | -40…85 °C |
| **Vibration resistance** | 25 gn amplitude = +/- 2 mm (f = 10…55 Hz) conforming to IEC 60068-2-6 |
| **Shock resistance** | 50 gn for 11 ms conforming to IEC 60068-2-27 |

## Packing Units

| | |
|---|---|
| **Unit Type of Package 1** | PCE |
| **Number of Units in Package 1** | 1 |
| **Package 1 Weight** | 141.0 g |
| **Package 1 Height** | 4.1 cm |
| **Package 1 width** | 5.2 cm |
| **Package 1 Length** | 9.8 cm |
| **Unit Type of Package 2** | S01 |
| **Number of Units in Package 2** | 11 |
| **Package 2 Weight** | 1.725 kg |
| **Package 2 Height** | 15 cm |
| **Package 2 width** | 15 cm |
| **Package 2 Length** | 40 cm |
| **Package 3 Height** | 15 cm |

## Offer Sustainability

| | |
|---|---|
| **Sustainable offer status** | Green Premium product |
| **REACh Regulation** | REACh Declaration |
| **EU RoHS Directive** | Pro-active compliance (Product out of EU RoHS legal scope)<br>EU RoHS Declaration |

| | |
|---|---|
| **Mercury free** | Yes |
| **RoHS exemption information** | Yes |
| **Environmental Disclosure** | Product Environmental Profile |
| **Circularity Profile** | End of Life Information |

## Contractual warranty

| | |
|---|---|
| **Warranty** | 18 months |

# Product datasheet XS630B4PBM12

Dimensions Drawings

## Dimensions

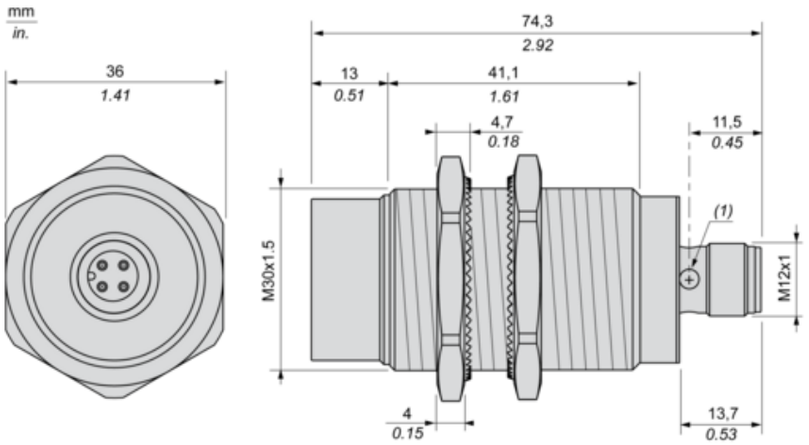


**(1) :** LED

## Minimum Mounting Distances in mm

Side by side

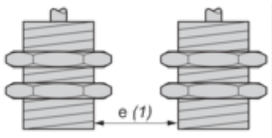


**e (1) ≥** 120 mm/4.72 in.

Face to face

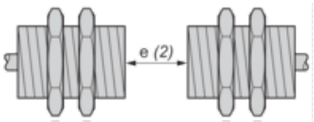


**e (2) ≥** 264 mm/10.39 in.

Facing a metal object

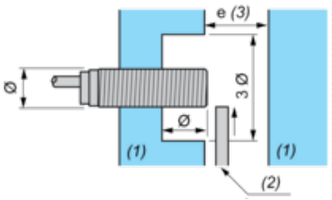


**e (3) ≥** 66 mm/2.60 in.

**(4)** Metal

**(5)** Object to be detected

## Wiring Schemes

**M12 connector**




**PNP**

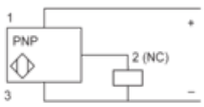


**1 :** (+)

**2 :** NC Output

**3 :** (-)

**4 :** Not connected