JUMO GmbH & Co. KG
Delivery address: Mackenrodtstraße 14,
36039 Fulda, Germany
Postal address: 36035 Fulda, Germany
Phone: +49 661 6003-0
Fax: +49 661 6003-607
e-mail: mail@jumo.net
Internet: www.jumo.net

JUMO Instrument Co. Ltd.
JUMO House
Temple Bank, Riverway
Harlow, Essex CM20 2DY, UK
Phone: +44 1279 635533
Fax: +44 1279 635262
e-mail: sales@jumo.co.uk
Internet: www.jumo.co.uk

JUMO Process Control, Inc.
8 Technology Boulevard
Canastota, NY 13031, USA
Phone: 315-697-JUMO
1-800-554-JUMO
Fax: 315-697-5867
e-mail: info@jumo.us
Internet: www.jumo.us

JUMO DELOS T

Electronic temperature switch with display and analog output



Basic type 902940/10

- **For temperatures from -50 to +260 °C (+500 °C)**
- **EHEDG certification**
- **Configuration with the rev transmitter on the temperature switch or the setup program**
- **M 12x1 plug-connection; protection class IP65 as per DIN EN 60529 with the machine connector inserted**

Brief description

The highly precise, electronic temperature switch comprises a sheath with built-in temperature probe, a process connection as well as an attached case with LCD display for the electronics. Depending on the application, the following output variants are available: 1x PNP or 2x PNP switching output (binary output) or 1x PNP switching output and 1x analog output.

The configuration of the output signal and the measuring range can be customized.

Depending on the version, the electronic temperature switch can be used in an operating temperature range from -50 to +150 °C, -50 to +260 °C and -50 to +500 °C. The analog output signal 4 to 20 mA, 0 to 20 mA, 0 to 10 V or reversed 20 to 4 mA, 20 to 0 mA and 10 to 0 V is available linearized (temperature linear).

The electronic temperature probe is designed for industrial applications and complies with the European Standards to guarantee electromagnetic compatibility (EMC).

Technical data

Electrical connection	Machine connector M12x1, 4-pin as per IEC 60947-5-2
Process connections	Screw connection G 1/4, G 3/8 and G 1/2 Screw connection M 12x1.5; M 18x1.5 and M 20x1.5 Screw connection 1/2-14NPT Union nut G 3/8 Pipe screw connection G 1/4 and G 1/2 Screw connection G 1/2 with CIP-conforming sealing cone and EHEDG certificate Conical port with union nut (milk pipe union) Clamp Spherical welding socket with clamp screw connection Welding socket with CIP-conforming sealing cone Varivent connections with EHEDG certificate JUMO PEKA with EHEDG certificate
Sheath	Stainless steel 316 L Material No. 1.4404/1.4435 Stainless steel 316 Ti Material No. 1.4571
Protection rating	IP65 as per DIN EN 60529 with the machine connector inserted
Response time	$t_{0.5}$: 3 s in water 0.4 m/s $t_{0.9}$: 8 s in water 0.4 m/s
Measuring insert	Pt1000 temperature probe, DIN EN 60751, class A or AA (1/3 DIN B), 4-wire circuit

Approvals/approval marks (see Technical Data)

2010-09-06/00536576

JUMO GmbH & Co. KG
Delivery address: Mackenrodtstraße 14,
36039 Fulda, Germany
Postal address: 36035 Fulda, Germany
Phone: +49 661 6003-0
Fax: +49 661 6003-607
e-mail: mail@jumo.net
Internet: www.jumo.net

JUMO Instrument Co. Ltd.
JUMO House
Temple Bank, Riverway
Harlow, Essex CM20 2DY, UK
Phone: +44 1279 635533
Fax: +44 1279 635262
e-mail: sales@jumo.co.uk
Internet: www.jumo.co.uk

JUMO Process Control, Inc.
8 Technology Boulevard
Canastota, NY 13031, USA
Phone: 315-697-JUMO
1-800-554-JUMO
Fax: 315-697-5867
e-mail: info@jumo.us
Internet: www.jumo.us

Technical data

General information

Reference conditions	DIN 16086 and DIN EN 60770
Display	positively lit LCD display
Alignment	The display can be mirror-imaged by 180° using the setup program
	after installation, the display case can be swivelled to the LH or RH side by ± 160° (use the combination tool)
Size	Display 16 x 26 mm / font size 7 mm / 2x 4-digit
Color	Standard operation: amber
	Error: red (text "Err", error code 1 to 9 flashes)
	Setup interface occupied: red
Switching status display	K1, K2
Temperature unit	°C or °F
Operation	
on the device	with the rev transmitter beneath the locking screw with combination tool or screwdriver 0.5×3 mm or Allen key, width across flats 2
with PC	with the setup program with PC interface

Input

Measuring input	1x Pt1000 temperature probe, 4-wire circuit
Measuring range	Basic type 902940/10: -50 to +150 °C Basic type 902940/30: -50 to +260 °C Basic type 902940/50: -50 to +500 °C
Limit value deviation	0.15 + 0.002 × t, class A 0.10 + 0.017 × t, class AA (1/3 DIN B)

Loop break detection

Probe short-circuit, probe and cable break, measuring range gone below, measuring range exceeded	Analog output 0 to 20 mA, 0 mA or 22 mA configurable Analog output 4 to 20 mA, 3.4 mA or 22 mA configurable Analog output 0 to 10 V, 0 V or 10.7 V configurable Switching outputs, low Additional error message on the LCD display

Outputs

All analog outputs in 3-wire circuit/Open Collector, PNP switching output

Analog output	
can be freely configured	4 to 20 mA and 1x PNP switching output 0 to 20 mA and 1x PNP switching output 0 to 10 V and 1x PNP switching output
Switching output	
Number	1x PNP switching output 2x PNP switching output
Switching type	N/C / N/O
Switching function	Window / hysteresis
Switching capacity	
- Voltage drop from UB	PNP ≤ 2 V
- Contact rating	ON ≤ 250 mA/OFF ≤ 1 mA
- Switching cycles	> 10 million
Reaction time	at 50 Hz: ≤ 200 ms at 60 Hz: ≤ 320 ms
Short-circuit proof	Yes

JUMO GmbH & Co. KG
Delivery address: Mackenrodtstraße 14,
36039 Fulda, Germany
Postal address: 36035 Fulda, Germany
Phone: +49 661 6003-0
Fax: +49 661 6003-607
e-mail: mail@jumo.net
Internet: www.jumo.net

JUMO Instrument Co. Ltd.
JUMO House
Temple Bank, Riverway
Harlow, Essex CM20 2DY, UK
Phone: +44 1279 635533
Fax: +44 1279 635262
e-mail: sales@jumo.co.uk
Internet: www.jumo.co.uk

JUMO Process Control, Inc.
8 Technology Boulevard
Canastota, NY 13031, USA
Phone: 315-697-JUMO
1-800-554-JUMO
Fax: 315-697-5867
e-mail: info@jumo.us
Internet: www.jumo.us

Load check, current	
- Period duration	2 s; T_{ON} 40 ms
- Periodic protection circuitry for overcurrent	f = 0.5 Hz LCD display: Err3 switching output K1, Err4 switching output K2
Scaling range	
Analog output	Scaling can be freely selected within the measuring range
Behavior when the scaling range is gone below	Analog output 0 to 20 mA, linear drop to 0 mA Analog output 4 to 20 mA, linear drop to 3.8 mA Analog output 0 to 10 V, linear drop to 0 V
Behavior when the scaling range is exceeded	Analog output 0 to 20 mA, linear increase up to 20.5 mA Analog output 4 to 20 mA, linear increase up to 20.5 mA Analog output 0 to 10 V, linear increase up to 10.2 V
Switching output	
- Switching point	Measuring range (> Release point)
- Release point	Measuring range (< Switching point)
- Damping	0.00 to 99.99 s
- Switch-on delay	0.00 to 99.99 s
Apparent ohmic resistance	
4 to 20 mA	$R_I \geq (U_B - 6.5\ V)/0.022\ A$
0 to 20 mA	$R_I \geq (U_B - 6.5\ V)/0.022\ A$
0 to 10 V	$R \geq 10\ k\Omega$

Ambient conditions

Admissible temperatures	
Ambient temperature, display case	-25 to +75 °C
Ambient temperature	-50°C; restricted function only stationary use, risk of cable break, LCD display without function
Storage temperature	-40 to +85 °C
Admissible air humidity	
- during operation	100 % including condensation of the device outer case
- during storage	90% without condensation
Admissible mechanical load	refering to basic type 902940/10 and 902940/30 with fitting length 100 mm
- Vibration resistance	10 g, 10 to 2000 Hz as per IEC 60068-2-6
- Shock resistance	50 g for 11 ms / 100 g for 1 ms as per IEC 60068-2-27
Electromagnetic compatibility	(only with 4-pin connection line and ground case)
- emitted interference	Class A as per EN 61326
- interference resistance	Performance characteristic A as per EN 61326
Protection rating	IP65 as per DIN EN 60529
Ambient temperature error	≤ 0.05 %/K

Auxiliary energy

Voltage supply	DC 14 to 30 V (nominal voltage supply DC 24 V) Ripple: ensure that the voltage peaks do **not** exceed or go below the specified values
- for output 0(4) to 20 mA	DC 12 to 30 V
- for output 0 to 10 V	DC 14 to 30 V
Reverse voltage protection	Yes
Power consumption	≤ 45 mA without load, ≤ 545 mA with load 2x PNP switching output
Electrical connection	Machine connector M 12x1, 4-pin as per IEC 60947-5-2, A-coded
Circuit	SELV
Influence of the voltage supply	≤ 0.02 %/V deviation from DC 24 V

JUMO GmbH & Co. KG
Delivery address: Mackenrodtstraße 14,
36039 Fulda, Germany
Postal address: 36035 Fulda, Germany
Phone: +49 661 6003-0
Fax: +49 661 6003-607
e-mail: mail@jumo.net
Internet: www.jumo.net

JUMO Instrument Co. Ltd.
JUMO House
Temple Bank, Riverway
Harlow, Essex CM20 2DY, UK
Phone: +44 1279 635533
Fax: +44 1279 635262
e-mail: sales@jumo.co.uk
Internet: www.jumo.co.uk

JUMO Process Control, Inc.
8 Technology Boulevard
Canastota, NY 13031, USA
Phone: 315-697-JUMO
1-800-554-JUMO
Fax: 315-697-5867
e-mail: info@jumo.us
Internet: www.jumo.us

Approvals/approval marks

Approval marks	Inspection authority	Certificate/ Inspection number	Inspection basics	valid for
EHEDG	TUM MAK	No. 03/2006	Document No. 8	Process connection 997 JUMO PEKA
EHEDG	TNO	No. C03-5145	Document No. 8	380 Varivent process connection

Connection diagram

Order code 470		Order code 471		Order codes 475, 476 and 477	
1x PNP switching output		2 x PNP switching output		1x PNP switching output and 1x analog output	
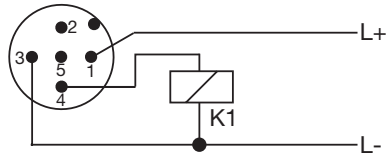		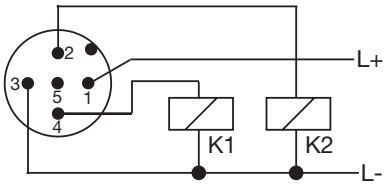		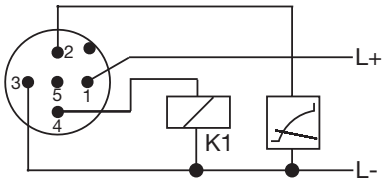	
Voltage supply		Voltage supply		Voltage supply	
1 L+	DC 14 to 30 V	1 L+	DC 14 to 30 V	1 L+	DC 14 to 30 V
3 L-	GND	3 L-	GND	3 L-	GND
Output		Output		Output	
4 K1	Highside Open Collector max. 0.25 A	2 K2	Highside Open Collector max. 0.25 A	2 analog	0(4) to 20 mA/0 to 10 V
2	nc	4 K1		4 K1	Highside Open Collector max. 0.25 A
5	Interface	5	Interface	5	Interface

Assignment: M 12x1 machine connector					The assignment **only** applies to A-coded standard cables.
	1 bn	Brown	4 bk	Black	
	2 wh	White	5 gy	Gray	
	3 bu	Blue			

Connection to the temperature switch rear.

Connection diagram (probe)

Machine connector M 12x1, 4-pin as per IEC 60947-5-2

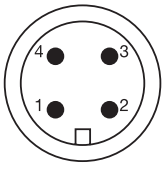

Top view to the machine connector on the corresponding RTD temperature probe.

Electrical connection	**Connection assignment**
Basic type 902940/50	
RTD temperature probe in 4-wire circuit (input)	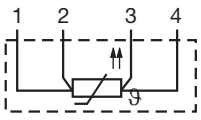

JUMO GmbH & Co. KG
Delivery address: Mackenrodtstraße 14,
36039 Fulda, Germany
Postal address: 36035 Fulda, Germany
Phone: +49 661 6003-0
Fax: +49 661 6003-607
e-mail: mail@jumo.net
Internet: www.jumo.net

JUMO Instrument Co. Ltd.
JUMO House
Temple Bank, Riverway
Harlow, Essex CM20 2DY, UK
Phone: +44 1279 635533
Fax: +44 1279 635262
e-mail: sales@jumo.co.uk
Internet: www.jumo.co.uk

JUMO Process Control, Inc.
8 Technology Boulevard
Canastota, NY 13031, USA
Phone: 315-697-JUMO
1-800-554-JUMO
Fax: 315-697-5867
e-mail: info@jumo.us
Internet: www.jumo.us

Dimensions

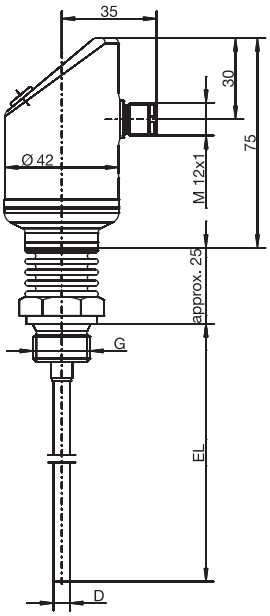

Basic type 902940/10

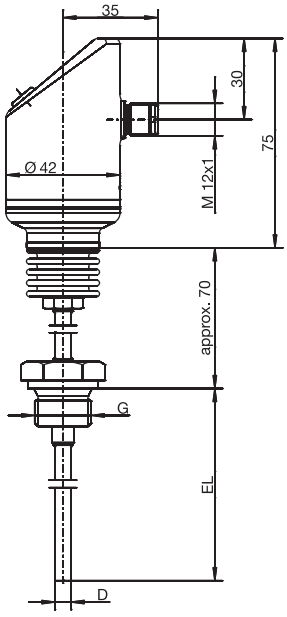

Basic type 902940/30
with neck pipe

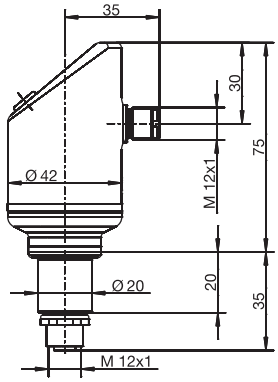

Basic type 902940/50
with M 12x1 connection
for RTD temperature probes

PA process connection dimensions

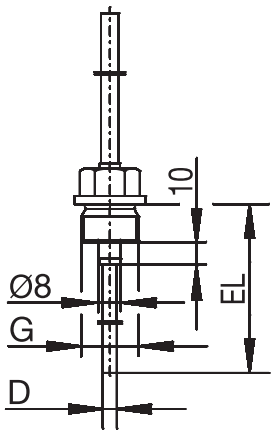

PA	G
103	3/8
104	1/2

Screw connection

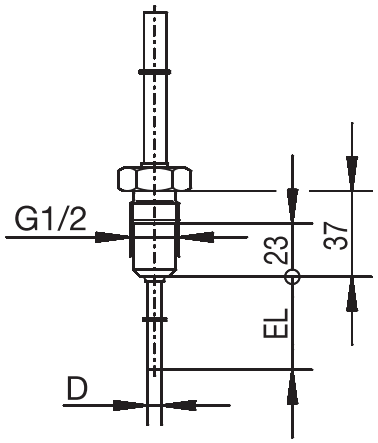

PA	
380	

Screw connection with CIP-conforming sealing cone

JUMO GmbH & Co. KG
Delivery address: Mackenrodtstraße 14,
36039 Fulda, Germany
Postal address: 36035 Fulda, Germany
Phone: +49 661 6003-0
Fax: +49 661 6003-607
e-mail: mail@jumo.net
Internet: www.jumo.net

JUMO Instrument Co. Ltd.
JUMO House
Temple Bank, Riverway
Harlow, Essex CM20 2DY, UK
Phone: +44 1279 635533
Fax: +44 1279 635262
e-mail: sales@jumo.co.uk
Internet: www.jumo.co.uk

JUMO Process Control, Inc.
8 Technology Boulevard
Canastota, NY 13031, USA
Phone: 315-697-JUMO
1-800-554-JUMO
Fax: 315-697-5867
e-mail: info@jumo.us
Internet: www.jumo.us

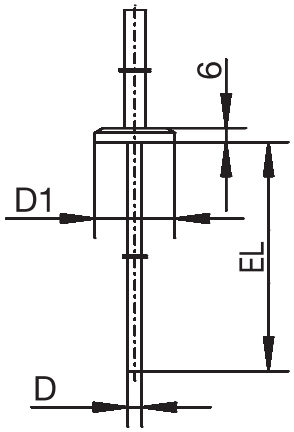

PA	DN	D1
-	-	∅ 25
611	10/20	∅ 34
613	25/1“	∅ 50.5

PA	DN	D1
613	40/1.5“	∅ 50.5
616	50/2“	∅ 64
617	2.5“	∅ 77.5

Clamp as per DIN 32676

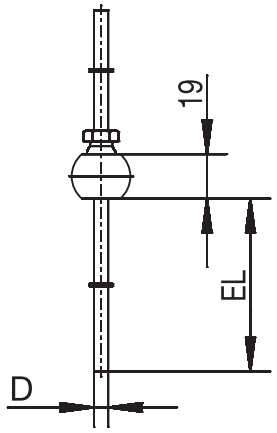

PA	
681	

Spherical welding socket with clamping screws

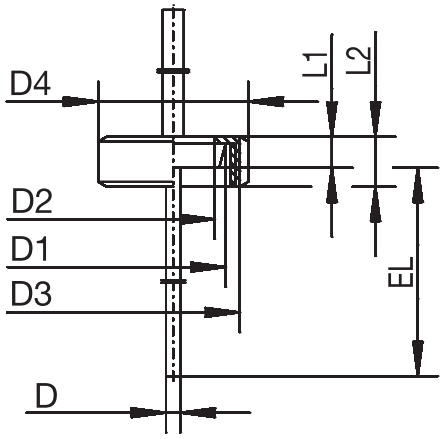

PA	DN	D1	D2	D3	D4	L1	L2
601	10	∅ 22	∅ 18	RD 28x1/8	∅ 38	9	18
604	25	∅ 44	∅ 35	RD 52x1/6	∅ 63	13	21
605	32	∅ 50	∅ 41	RD 58x1/6	∅ 70	13	21

Clamp with union nut as per DIN 11851 (milk pipe union)

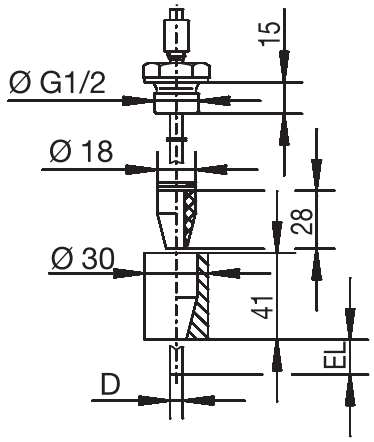

PA	
682	

Welding socket with CIP-conforming sealing cone

JUMO GmbH & Co. KG
Delivery address: Mackenrodtstraße 14,
36039 Fulda, Germany
Postal address: 36035 Fulda, Germany
Phone: +49 661 6003-0
Fax: +49 661 6003-607
e-mail: mail@jumo.net
Internet: www.jumo.net

JUMO Instrument Co. Ltd.
JUMO House
Temple Bank, Riverway
Harlow, Essex CM20 2DY, UK
Phone: +44 1279 635533
Fax: +44 1279 635262
e-mail: sales@jumo.co.uk
Internet: www.jumo.co.uk

JUMO Process Control, Inc.
8 Technology Boulevard
Canastota, NY 13031, USA
Phone: 315-697-JUMO
1-800-554-JUMO
Fax: 315-697-5867
e-mail: info@jumo.us
Internet: www.jumo.us

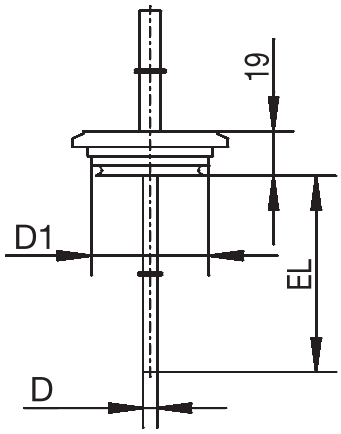

PA	DN	D1
684	15/10	∅ 31
685	32/25	∅ 50
686	50/40	∅ 68

Varivent connection

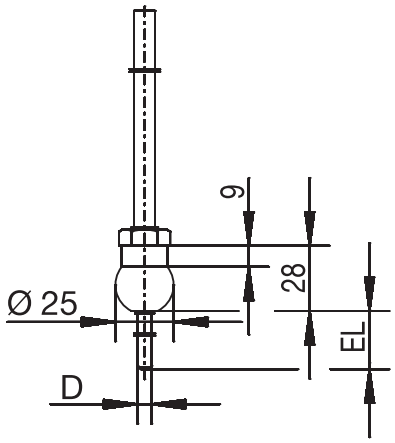

PA	
681	

Spherical welding socket

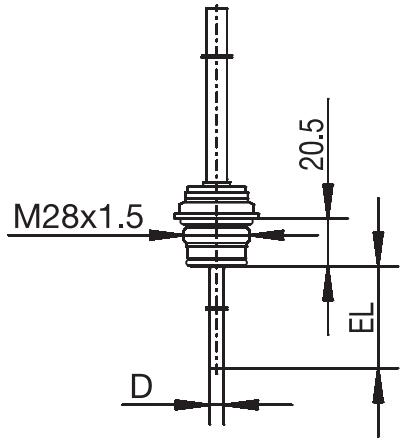

Varivent	Clamp	Aseptic	Welding socket
DN 25/32	DN 25/32/40	DN 40	∅ 55 mm
DN 40-125	DN 50	DN 50	-
-	-	NKS DN 40	-

JUMO PEKA PA 997
Process connection adapter, see data and price sheet 40.9711

JUMO GmbH & Co. KG
Hausadresse: Moritz-Juchheim-Straße 1, 36039 Fulda, Germany
Lieferadresse: Mackenrodtstraße 14, 36039 Fulda, Germany
Postadresse: 36035 Fulda, Germany

Telefon: +49 661 6003-722/724
Telefax: +49 661 6003-601/688
E-Mail: mail@jumo.net
Internet: www.jumo.net

Block diagram

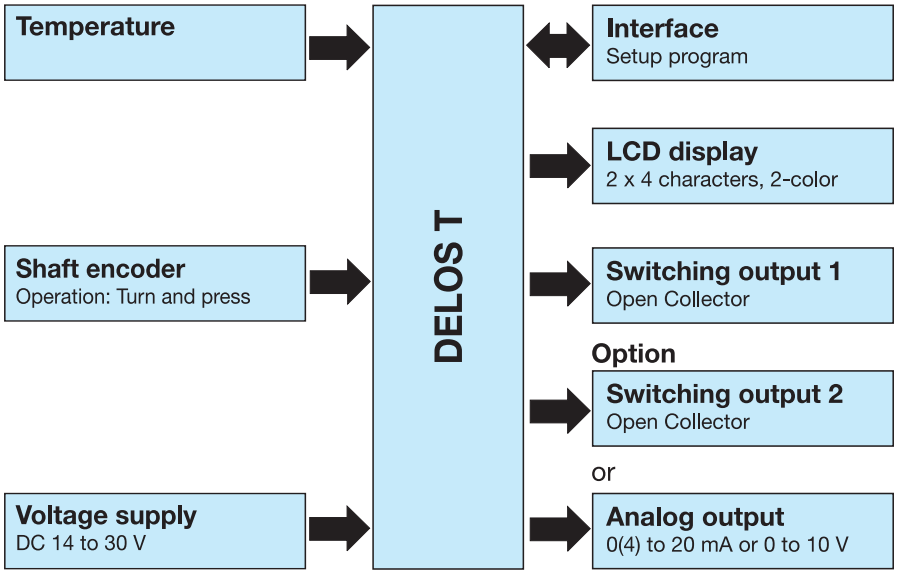

Special features

- Measuring range can be freely scaled
- 2-color LCD display
  with alarm function
- Analog output configurable
- up to 500°C medium temperature
- programmable on the device
  or with the setup program

Setup program

The setup program (accessories) serves to configure the temperature switch with a PC. The configuration data can be archived and printed on the PC.

The setup program can be used to overwrite changed parameters with the factory setting at any time.
The connection between temperature switch and PC is established using a PC interface (USB/TTL converter) with adapter (USB connection line) and connection line (Y cable).

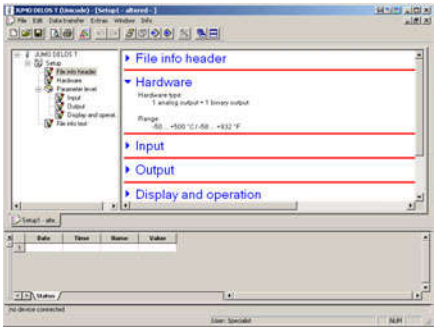

JUMO GmbH & Co. KG
Delivery address: Mackenrodtstraße 14,
36039 Fulda, Germany
Postal address: 36035 Fulda, Germany
Phone: +49 661 6003-0
Fax: +49 661 6003-607
e-mail: mail@jumo.net
Internet: www.jumo.net

JUMO Instrument Co. Ltd.
JUMO House
Temple Bank, Riverway
Harlow, Essex CM20 2DY, UK
Phone: +44 1279 635533
Fax: +44 1279 635262
e-mail: sales@jumo.co.uk
Internet: www.jumo.co.uk

JUMO Process Control, Inc.
8 Technology Boulevard
Canastota, NY 13031, USA
Phone: 315-697-JUMO
1-800-554-JUMO
Fax: 315-697-5867
e-mail: info@jumo.us
Internet: www.jumo.us

Order details

		(1)	**Basic type**
	902940/10		DELOS T Electronic temperature switch with display and analog output Ambient temperature on the display case: -20 to +75 °C Parts coming into contact with the medium are electropolished, roughness depth Ra ≤ 0.8 µm
		(2)	**Version**
x	8		Standard, with factory settings
x	9		Customer-specific configuration (specifications in plain text)
		(3)	**Operating temperature in °C**
x	370		-50 to +150 °C
		(4)	**Measuring insert**
x	1013		1x Pt1000 in 4-wire circuit
		(5)	**Tolerance class as per DIN EN 60751**
x	2		Class A (standard)
x	3		Class AA (1/3 DIN B)
		(6)	**Output**
x	470		1x PNP switching output
x	471		2x PNP switching output
x	475		1x PNP switching output and 1x analog output 4 to 20 mA, configurable
x	476		1x PNP switching output and 1x analog output 0 to 20 mA, configurable
x	477		1x PNP switching output and 1x analog output 0 to 10 V, configurable
		(7)	**Sheath diameter D in mm**
x	6		∅ 6 mm
		(8)	**Fitting length EL in mm (EL 50 to 500 mm)**
x	50		50 mm
x	100		100 mm
x	150		150 mm
x	...		Please specify in plain text (50 mm steps)
		(9)	**Process connection PA**
x	000		None (plain sheath made of stainless steel 316L)
x	102		Screw connection G 1/4 (stainless steel 316Ti)
x	103		Screw connection G 3/8 (stainless steel 316Ti)
x	104		Screw connection G 1/2 (stainless steel 316Ti) (not electropolished)
x	118		Screw connection M 12x1.5 (stainless steel 316Ti)
x	126		Screw connection M 18x1.5 (stainless steel 316Ti)
x	128		Screw connection M 20x1.5 (stainless steel 316Ti)
x	144		Screw connection 1/2-14NPT (stainless steel 316Ti)
x	163		Union nut G 3/8 (stainless steel 316Ti)
x	252		Pipe screw connection G 1/4 (stainless steel 316Ti)
x	254		Pipe screw connection G 1/2 (stainless steel 316Ti)
x	380		Screw connection G 1/2 with CIP-conforming sealing cone and EHEDG certificate (stainless steel 316L)

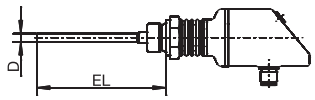

JUMO GmbH & Co. KG
Delivery address: Mackenrodtstraße 14,
36039 Fulda, Germany
Postal address: 36035 Fulda, Germany
Phone: +49 661 6003-0
Fax: +49 661 6003-607
e-mail: mail@jumo.net
Internet: www.jumo.net

JUMO Instrument Co. Ltd.
JUMO House
Temple Bank, Riverway
Harlow, Essex CM20 2DY, UK
Phone: +44 1279 635533
Fax: +44 1279 635262
e-mail: sales@jumo.co.uk
Internet: www.jumo.co.uk

JUMO Process Control, Inc.
8 Technology Boulevard
Canastota, NY 13031, USA
Phone: 315-697-JUMO
1-800-554-JUMO
Fax: 315-697-5867
e-mail: info@jumo.us
Internet: www.jumo.us

x	601	Spherical port with union nut DN 10 DIN 11851 (milk pipe union) (stainless steel 316L)
x	604	Conical port with union nut DN 25 DIN 11851 (milk pipe union) (stainless steel 316L)
x	605	Conical port with union nut DN 32 DIN 11851 (milk pipe union) (stainless steel 316L)
x	611	Clamp DN 10/20 DIN 32676 (stainless steel 316L)
x	613	Clamp DN 25/40 (1“/1.5“) DIN 32676 (stainless steel 316L)
x	616	Clamp DN 50 (2“) DIN 32676 (stainless steel 316L)
x	617	Clamp 2.5“ similar to DIN 32676 (stainless steel 316L)
x	681	Spherical welding socket with clamp screw connection (stainless steel 316L) (not electropolished)
x	682	Welding socket with CIP-conforming sealing cone (stainless steel 316L) (not electropolished)
x	684	Varivent connection DN 15/10 with EHEDG certificate (stainless steel 316L)
x	685	Varivent connection DN 32/25 with EHEDG certificate (stainless steel 316L)
x	686	Varivent connection DN 50/40 with EHEDG certificate (stainless steel 316L)
x	840	Spherical welding sleeve (stainless steel 316Ti) (not electropolished)
x	997	JUMO PEKA with EHEDG certificate (stainless steel 316L) (compatible process connection adapter, see data and price sheet 40.9711)

(10) Extra codes

x	000	None
x	310	Sheath ∅ 6 mm stepped down to ∅ 3.8 mm
x	810	Welding socket (only for process connection 380)

	(1)		(2)		(3)		(4)		(5)		(6)		(7)		(8)		(9)		(10)	
Order code		-		-		-		-		-		-		-		-		/		, ...[a]
Order example	902940/10	-	8	-	370	-	1013	-	2	-	475	-	6	-	50	-	000	/	000	

[a] State extra codes one after another, separated by commas.

JUMO GmbH & Co. KG
Delivery address: Mackenrodtstraße 14,
36039 Fulda, Germany
Postal address: 36035 Fulda, Germany
Phone: +49 661 6003-0
Fax: +49 661 6003-607
e-mail: mail@jumo.net
Internet: www.jumo.net

JUMO Instrument Co. Ltd.
JUMO House
Temple Bank, Riverway
Harlow, Essex CM20 2DY, UK
Phone: +44 1279 635533
Fax: +44 1279 635262
e-mail: sales@jumo.co.uk
Internet: www.jumo.co.uk

JUMO Process Control, Inc.
8 Technology Boulevard
Canastota, NY 13031, USA
Phone: 315-697-JUMO
1-800-554-JUMO
Fax: 315-697-5867
e-mail: info@jumo.us
Internet: www.jumo.us

Scope of delivery

1 device in the version ordered
1 combination tool (required for operation on the device and after installation to turn the display case through ± 160° to the LH or RH side)
1 operating instructions B 90.2940.0

Accessories

Article	**Part No.**
Setup program on CD-ROM, multilingual	90/00550018
PC interface with USB/TTL converter and adapter (USB connection line) (required for the configuration with the setup program)	70/00456352
Connection line (Y cable) (required for the configuration with the setup program)	40/00507861
Combination tool (required for operation on the device and after installation to turn the display case through ± 160° to the LH or RH side)	40/00526614
Cable box, 4-pin (straight) M 12x1 with PVC connection line length 2000 mm (can be used for individual assembling)	40/00404585
Cable box, 4-pin (angled) M 12x1 with PVC connection line length 2000 mm (can be used for individual assembling)	40/00409334

Stock versions

Order code	**Sales article No.**
902940/10-8-370-1013-2-475-6-100-104/000	90/00550991
902940/10-8-370-1013-2-475-6-150-000/000	90/00551003

JUMO GmbH & Co. KG
Delivery address: Mackenrodtstraße 14,
36039 Fulda, Germany
Postal address: 36035 Fulda, Germany
Phone: +49 661 6003-0
Fax: +49 661 6003-607
e-mail: mail@jumo.net
Internet: www.jumo.net

JUMO Instrument Co. Ltd.
JUMO House
Temple Bank, Riverway
Harlow, Essex CM20 2DY, UK
Phone: +44 1279 635533
Fax: +44 1279 635262
e-mail: sales@jumo.co.uk
Internet: www.jumo.co.uk

JUMO Process Control, Inc.
8 Technology Boulevard
Canastota, NY 13031, USA
Phone: 315-697-JUMO
1-800-554-JUMO
Fax: 315-697-5867
e-mail: info@jumo.us
Internet: www.jumo.us

Order details

		(1)	**Basic type**
	902940/30		DELOS T Electronic temperature switch with display and analog output with neck pipe for higher medium temperatures Ambient temperature on the display case: -20 to +75 °C Parts coming into contact with the medium are electropolished, roughness depth Ra ≤ 0.8 µm
		(2)	**Version**
x	8		Standard, with factory settings
x	9		Customer-specific configuration (specifications in plain text)
		(3)	**Operating temperature in °C**
x	386		-50 to +260 °C
		(4)	**Measuring insert**
x	1013		1x Pt1000 in 4-wire circuit
		(5)	**Tolerance class as per DIN EN 60751**
x	2		Class A (standard)
x	3		Class AA (1/3 DIN B)
		(6)	**Output**
x	470		1x PNP switching output
x	471		2x PNP switching output
x	475		1x PNP switching output and 1x analog output 4 to 20 mA, configurable
x	476		1x PNP switching output and 1x analog output 0 to 20 mA, configurable
x	477		1x PNP switching output and 1x analog output 0 to 10 V, configurable
		(7)	**Sheath diameter D in mm**
x	6		∅ 6 mm
		(8)	**Fitting length EL in mm (EL 50 to 500 mm)**
x	50		50 mm
x	100		100 mm
x	...		Please specify in plain text (50 mm steps)
		(9)	**Process connection PA**
x	000		None (plain sheath made of stainless steel 316L)
x	102		Screw connection G 1/4 (stainless steel 316Ti)
x	103		Screw connection G 3/8 (stainless steel 316Ti)
x	104		Screw connection G 1/2 (stainless steel 316Ti) (not electropolished)
x	118		Screw connection M 12x1.5 (stainless steel 316Ti)
x	126		Screw connection M 18x1.5 (stainless steel 316Ti)
x	128		Screw connection M 20x1.5 (stainless steel 316Ti)
x	144		Screw connection 1/2-14NPT (stainless steel 316Ti)
x	163		Union nut G 3/8 (stainless steel 316Ti)
x	252		Pipe screw connection G 1/4 (stainless steel 316Ti)
x	254		Pipe screw connection G 1/2 (stainless steel 316Ti)
x	380		Screw connection G 1/2 with CIP-conforming sealing cone and EHEDG certificate (stainless steel 316L)

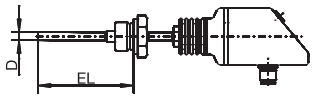

JUMO GmbH & Co. KG
Delivery address: Mackenrodtstraße 14,
36039 Fulda, Germany
Postal address: 36035 Fulda, Germany
Phone: +49 661 6003-0
Fax: +49 661 6003-607
e-mail: mail@jumo.net
Internet: www.jumo.net

JUMO Instrument Co. Ltd.
JUMO House
Temple Bank, Riverway
Harlow, Essex CM20 2DY, UK
Phone: +44 1279 635533
Fax: +44 1279 635262
e-mail: sales@jumo.co.uk
Internet: www.jumo.co.uk

JUMO Process Control, Inc.
8 Technology Boulevard
Canastota, NY 13031, USA
Phone: 315-697-JUMO
1-800-554-JUMO
Fax: 315-697-5867
e-mail: info@jumo.us
Internet: www.jumo.us

x	601	Conical port with union nut DN 10 DIN 11851 (milk pipe union) (stainless steel 316L)
x	604	Conical port with union nut DN 25 DIN 11851 (milk pipe union) (stainless steel 316L)
x	605	Conical port with union nut DN 32 DIN 11851 (milk pipe union) (stainless steel 316L)
x	611	Clamp DN 10/20 DIN 32676 (stainless steel 316L)
x	613	Clamp DN 25/40 (1“/1.5“) DIN 32676 (stainless steel 316L)
x	616	Clamp DN 50 (2“) DIN 32676 (stainless steel 316L)
x	617	Clamp 2.5“ similar to DIN 32676 (stainless steel 316L)
x	681	Spherical welding socket with clamp screw connection (stainless steel 316L) (not electropolished)
x	682	Welding socket with CIP-conforming sealing cone (stainless steel 316L) (not electropolished)
x	684	Varivent connection DN 15/10 with EHEDG certificate (stainless steel 316L)
x	685	Varivent connection DN 32/25 with EHEDG certificate (stainless steel 316L)
x	686	Varivent connection DN 50/40 with EHEDG certificate (stainless steel 316L)
x	840	Spherical welding sleeve (stainless steel 316Ti) (not electropolished)
x	997	JUMO PEKA with EHEDG certificate (stainless steel 316L) (compatible process connection adapter, see data and price sheet 40.9711)

(10) Extra codes

x	000	None
x	310	Sheath ∅ 6 mm stepped down to ∅ 3.8 mm
x	810	Welding socket (only for process connection 380)

	(1)		(2)		(3)		(4)		(5)		(6)		(7)		(8)		(9)		(10)	
Order code		-		-		-		-		-		-		-		-		/		, ...[a]
Order example	902940/30	-	8	-	386	-	1013	-	2	-	475	-	6	-	50	-	102	/	000	

[a] State extra codes one after another, separated by commas.

JUMO GmbH & Co. KG
Delivery address: Mackenrodtstraße 14,
36039 Fulda, Germany
Postal address: 36035 Fulda, Germany
Phone: +49 661 6003-0
Fax: +49 661 6003-607
e-mail: mail@jumo.net
Internet: www.jumo.net

JUMO Instrument Co. Ltd.
JUMO House
Temple Bank, Riverway
Harlow, Essex CM20 2DY, UK
Phone: +44 1279 635533
Fax: +44 1279 635262
e-mail: sales@jumo.co.uk
Internet: www.jumo.co.uk

JUMO Process Control, Inc.
8 Technology Boulevard
Canastota, NY 13031, USA
Phone: 315-697-JUMO
1-800-554-JUMO
Fax: 315-697-5867
e-mail: info@jumo.us
Internet: www.jumo.us

Scope of delivery

1 device in the version ordered
1 combination tool (required for operation on the device and after installation to turn the display case through ± 160° to the LH or RH side)
1 operating instructions B 90.2940.0

Accessories

Article	**Part No.**
Setup program on CD-ROM, multilingual	90/00550018
PC interface with USB/TTL converter and adapter (USB connection line) (required for the configuration with the setup program)	70/00456352
Connection line (Y cable) (required for the configuration with the setup program)	40/00507861
Combination tool (required for operation on the device and after installation to turn the display case through ± 160° to the LH or RH side)	40/00526614
Cable box, 4-pin (straight) M 12x1 with PVC connection line length 2000 mm (can be used for individual assembling)	40/00404585
Cable box, 4-pin (angled) M 12x1 with PVC connection line length 2000 mm (can be used for individual assembling)	40/00409334

JUMO GmbH & Co. KG
Delivery address: Mackenrodtstraße 14,
36039 Fulda, Germany
Postal address: 36035 Fulda, Germany
Phone: +49 661 6003-0
Fax: +49 661 6003-607
e-mail: mail@jumo.net
Internet: www.jumo.net

JUMO Instrument Co. Ltd.
JUMO House
Temple Bank, Riverway
Harlow, Essex CM20 2DY, UK
Phone: +44 1279 635533
Fax: +44 1279 635262
e-mail: sales@jumo.co.uk
Internet: www.jumo.co.uk

JUMO Process Control, Inc.
8 Technology Boulevard
Canastota, NY 13031, USA
Phone: 315-697-JUMO
1-800-554-JUMO
Fax: 315-697-5867
e-mail: info@jumo.us
Internet: www.jumo.us

Order details

(1) Basic type

902940/50	DELOS T Electronic temperature switch with display and analog output and M 12x1 connection for RTD temperature probes Ambient temperature on the display case: -20 to +75 °C	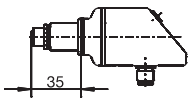

(2) Version

x	8	Standard, with factory settings
x	9	Customer-specific configuration (specifications in plain text)

(3) Operating temperature in °C

x	408	-50 to +500 °C

(4) Measuring input

x	1013	1x Pt1000 in 4-wire circuit

(5) Tolerance class as per DIN EN 60751

x	0	None (not relevant)

(6) Output

x	470	1x PNP switching output
x	471	2x PNP switching output
x	475	1x PNP switching output and 1x analog output 4 to 20 mA, configurable
x	476	1x PNP switching output and 1x analog output 0 to 20 mA, configurable
x	477	1x PNP switching output and 1x analog output 0 to 10 V, configurable

(7) Sheath diameter D in mm

x	0	None (not relevant)

(8) Fitting length EL in mm

x	000	None (not relevant)

(9) Process connection PA

x	000	None (not relevant)

(10) Extra codes

x	000	None

	(1)		(2)		(3)		(4)		(5)		(6)		(7)		(8)		(9)		(10)
Order code		-		-		-		-		-		-		-		-		/	
Order example	902940/50	-	8	-	408	-	1013	-	0	-	475	-	0	-	000	-	000	/	000

JUMO GmbH & Co. KG
Delivery address: Mackenrodtstraße 14,
36039 Fulda, Germany
Postal address: 36035 Fulda, Germany
Phone: +49 661 6003-0
Fax: +49 661 6003-607
e-mail: mail@jumo.net
Internet: www.jumo.net

JUMO Instrument Co. Ltd.
JUMO House
Temple Bank, Riverway
Harlow, Essex CM20 2DY, UK
Phone: +44 1279 635533
Fax: +44 1279 635262
e-mail: sales@jumo.co.uk
Internet: www.jumo.co.uk

JUMO Process Control, Inc.
8 Technology Boulevard
Canastota, NY 13031, USA
Phone: 315-697-JUMO
1-800-554-JUMO
Fax: 315-697-5867
e-mail: info@jumo.us
Internet: www.jumo.us

Scope of delivery

1 device in the version ordered
1 combination tool (required for operation on the device and after installation to turn the display case through ± 160° to the LH or RH side)
1 operating instructions B 90.2940.0

Accessories

Article	**Part No.**
Setup program on CD-ROM, multilingual	90/00550018
PC interface with USB/TTL converter and adapter (USB connection line) (required for the configuration with the setup program)	70/00456352
Connection line (Y cable) (required for the configuration with the setup program)	40/00507861
Combination tool (required for operation on the device and after installation to turn the display case through ± 160° to the LH or RH side)	40/00526614
Cable box, 4-pin (straight) M 12x1 with PVC connection line length 2000 mm (can be used for individual assembling)	40/00404585
Cable box, 4-pin (angled) M 12x1 with PVC connection line length 2000 mm (can be used for individual assembling)	40/00409334
Machine connector M12x1, 4-pin as per IEC 60947-5-2	90/00404727
Push-in RTD temperature probe with Pt 1000 temperature probe and machine connector M12x1	
902150/30-386-1006-2-6-100-80-2500/315, 317 Sheath diameter 6 mm, fitting length 100 mm, connection line length 2500 mm	90/00551310
902150/30-386-1006-2-6-200-80-2500/315, 317 Sheath diameter 6 mm, fitting length 200 mm, connection line length 2500 mm	90/00551311
Note: For sheath screw connections and flanges, please refer to the data and price sheet 90.9750 (90.9725)	

Stock version

Order code	**Sales article No.**
902940/50-8-408-1013-0-475-0-000-000/000	90/00551004