O5H51A

Diffuse reflection sensor with background suppression

O5H-FPKG/US100/3D

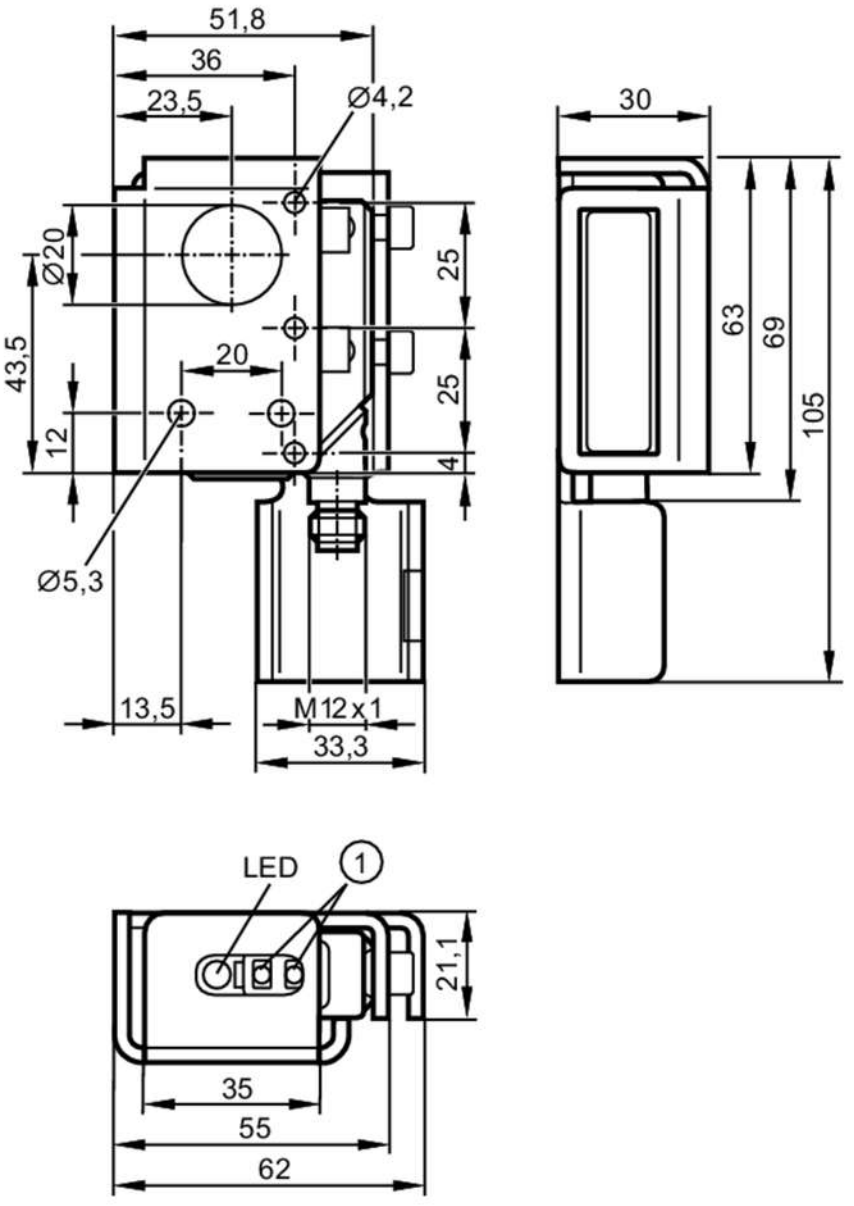

1 programming buttons
receiver in upper lens
transmitter in lower lens

Product characteristics		
Type of light		red light
Housing		rectangular
Application		
Special feature		Background suppression
Function principle		Diffuse reflection sensor
Electrical data		
Operating voltage	[V]	10...30 DC; (when used outside the hazardous area: 10...36)

O5H51A

Diffuse reflection sensor with background suppression

O5H-FPKG/US100/3D

Current consumption	[mA]	25
Protection class		III
Reverse polarity protection		yes
Type of light		red light
Outputs		
Electrical design		PNP
Output function		light-on/dark-on mode; (programmable)
Max. voltage drop switching output DC	[V]	2.5
Permanent current rating of switching output DC	[mA]	100; (when used outside the hazardous area: 200)
Switching frequency DC	[Hz]	1000
Short-circuit protection		yes
Type of short-circuit protection		pulsed
Overload protection		yes
Detection zone		
Range	[mm]	50...1800; (white paper 200 x 200 mm 90% remission)
Range on white object (90 % remission)	[mm]	50...1800
Range on grey object (18 % remission)	[mm]	50...900
Range on black object (6 % remission)	[mm]	50...600
Range adjustable		yes
Max. light spot diameter	[mm]	50
Background suppression available		yes
Operating conditions		
Ambient temperature	[°C]	-10...50
Note on ambient temperature		when used outside the hazardous area: -25...60 °C
Protection		IP 65
Tests / approvals		
ATEX marking		II 3D Ex tc IIIC T105°C Dc X
EMC		EN 60947-5-2
MTTF	[years]	360
Mechanical data		
Weight	[g]	335
Housing		rectangular
Dimensions	[mm]	105 x 30 x 62
Materials		housing: PA; bezel: stainless steel; operator interface: TPU; Protective bracket: stainless steel
Lens material		PMMA
Lens alignment		side lens
Displays / operating elements		
Display	switching status	1 x LED, yellow

O5H51A

Diffuse reflection sensor with background suppression

O5H-FPKG/US100/3D

Teach function	yes
Electronic lock	yes

Remarks

Pack quantity	1 pcs.

Electrical connection

Connector: 1 x M12; coding: A



Connection

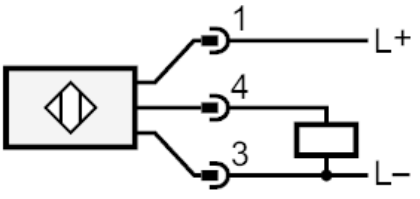

Diagrams and graphs

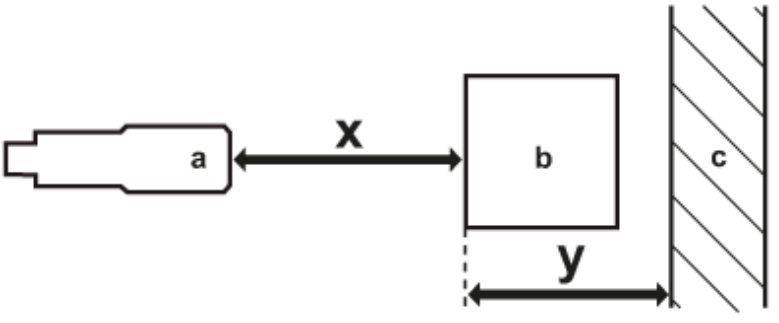

a: sensor
b: object
c: background
x: distance sensor/object [mm]
y: min. distance object/background [mm]

O5H51A

Diffuse reflection sensor with background suppression

O5H-FPKG/US100/3D

accuracy graph

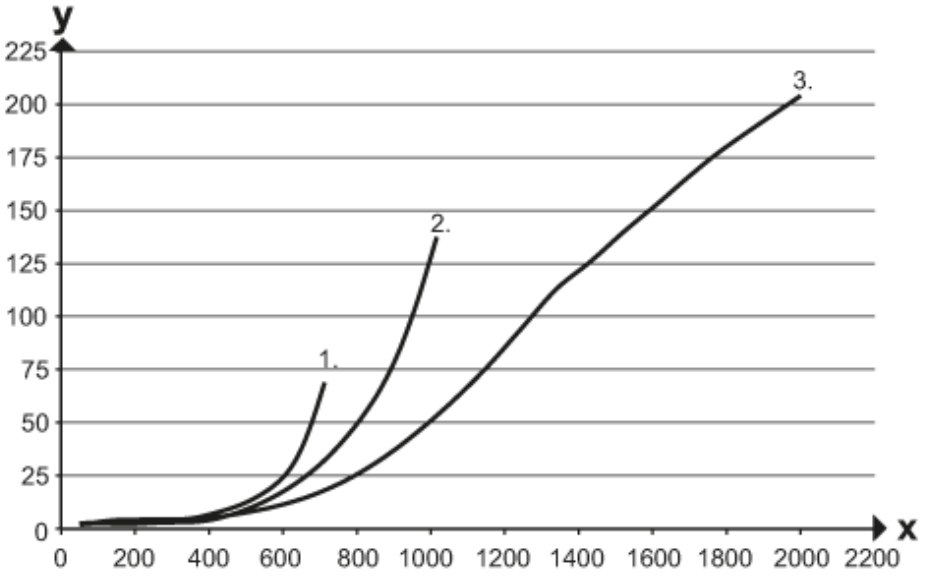

x: distance sensor/object [mm]

y: min. distance object/background [mm]

1 = object black (6 % remission) , background white (90 % remission)

2 = object grey (18 % remission) , background white (90 % remission)

3 = object white (90 % remission) , background white (90 % remission)