Inductive sensor
with analog output
BI15-M30E-LIU-H1141

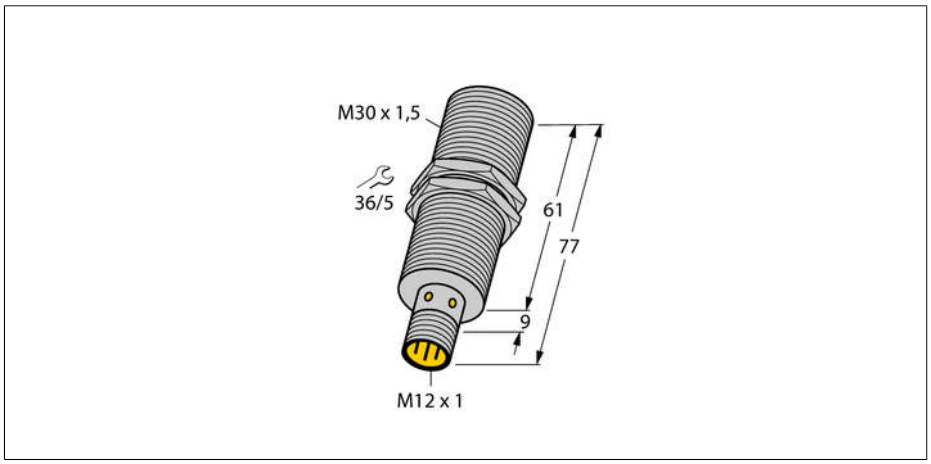

- **Threaded barrel, M30 x 1.5**
- **Long version**
- **Chrome-plated brass**
- **Analog+**
- **Extended operating range**
- **4-wire, 15…30 VDC**
- **Analog output**
- **0…10 V and 0…20 mA**
- **M12 x 1 connector**

Type	BI15-M30E-LIU-H1141
Ident-No.	1535563
Measuring range [A…B]	2…10mm
Mounting condition	flush
Correction factors	St37 = 1; Al = 0.3; stainless steel = 0.7; Ms = 0.4
Repeatability	≤ 1 % of measuring range |A - B|
	≤ 0.5 %, after warm-up 0.5 h
Reproducibility	≤ 80 µm
	≤ 40 µm, after a warm-up time of 0.5 h
Linearity deviation	≤ 5 % of full scale
Temperature drift	≤ ± 0.06 % / K
Ambient temperature	-25…+70 °C
Operating voltage	15…30VDC
Residual ripple	≤ 10 % U_{ss}
No-load current I_0	≤ 8 mA
Rated insulation voltage	≤ 0.5 kV
Short-circuit protection	yes
Wire breakage / Reverse polarity protection	yes/ complete
Output function	4-wire, Analog output
Voltage output	0…10V
Current output	0…20mA
Load resistance voltage output	≥ 4.7 kΩ
Load resistance current output	≤ 0.4 kΩ
Measuring sequence frequency	140 Hz
Design	threaded barrel, M30 x 1.5
Dimensions	77 mm
Housing material	Metal, CuZn, chrome-plated
Material active face	Plastic, PA
Max. tightening torque housing nut	75 Nm
Connection	male, M12 x 1
Vibration resistance	55 Hz (1 mm)
Shock resistance	30 g (11 ms)
Protection class	IP67
MTTF	751 years acc. to SN 29500 (Ed. 99) 40 °C

Wiring diagram

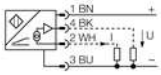

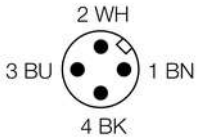

Functional principle

Inductive TURCK sensors with analog output accomplish simple control tasks. They provide a current, voltage or frequency signal proportional to the target's distance. The output signal is linear to the distance of the target over the entire sensing range.

Measuring range

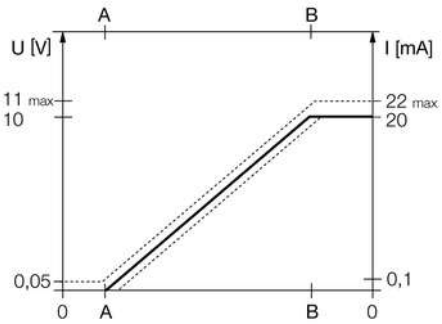

Edition • 2013-05-17T06:31:42+02:00

Hans Turck GmbH & Co.KG ● D-45472 Mülheim an der Ruhr ● Witzlebenstraße 7 ● Tel. 0208 4952-0 ● Fax 0208 4952-264 ● more@turck.com ● www.turck.com

Inductive sensor
with analog output
BI15-M30E-LIU-H1141

Mounting instructions	minimum distances
Distance D	60 mm
Distance W	27 mm
Distance T	3 x B
Distance S	45 mm
Distance G	54 mm

Diameter of the active area B	Ø 30 mm

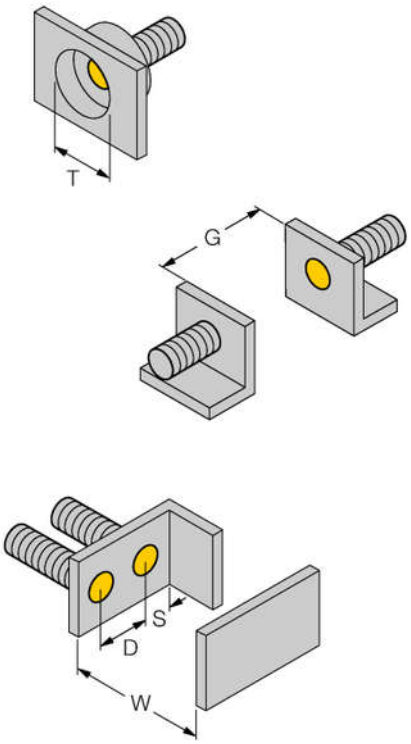

Edition • 2013-05-17T06:31:42+02:00

Hans Turck GmbH & Co.KG ● D-45472 Mülheim an der Ruhr ● Witzlebenstraße 7 ● Tel. 0208 4952-0 ● Fax 0208 4952-264 ● more@turck.com ● www.turck.com

Accessories

Type code	Ident-No.	Description	Dimension drawing
IM43-13-SR	7540041	Limit value monitor; 1-channel; input 0/4…20 mA or 0/2…10 V; supply of 2- or 3-wire transmitters/sensors; limit value adjustment via teach button; three relay outputs with one NO contact each; removable terminal blocks; 27 mm wide; universal voltage supply 20…250 VUC; further limit value monitors are described in our "Interface Technology" catalog.	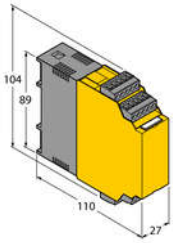
QM-30	6945103	Quick-mount bracket with dead-stop; material: Chrome-plated brass Male thread M36 x 1.5. Note: The switching distance of proximity switches can be reduced by the use of quick-mount brackets.	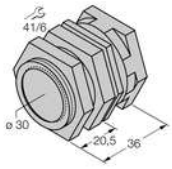
BST-30B	6947216	Fixing clamp for threaded barrel devices, with dead-stop; material: PA6	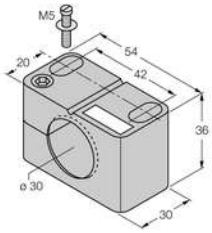
MW-30	6945005	Mounting bracket for threaded barrel devices; material: Stainless steel A2 1.4301 (AISI 304)	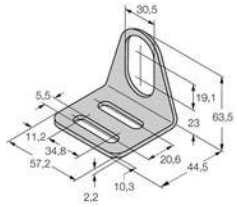
BSS-30	6901319	Mounting bracket for smooth and threaded barrel devices; material: Polypropylene	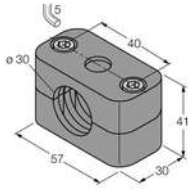

Edition • 2013-05-17T06:31:42+02:00

 Hans Turck GmbH & Co.KG ● D-45472 Mülheim an der Ruhr ● Witzlebenstraße 7 ● Tel. 0208 4952-0 ● Fax 0208 4952-264 ● more@turck.com ● www.turck.com