EVC810

Wirable socket

SDOGH040MSSFKPG

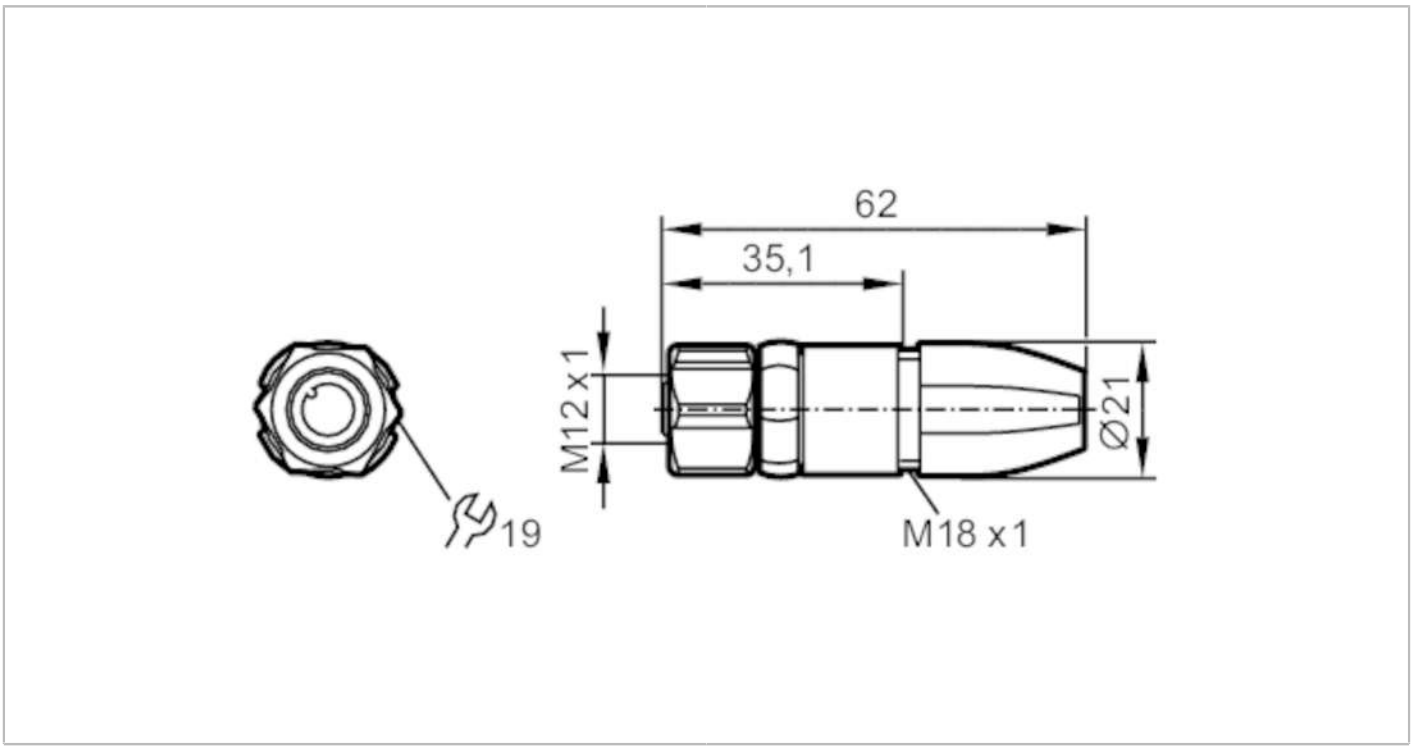

Application		
Special feature		Free from silicone; Gold-plated contacts
Free from silicone		yes
Electrical data		
Operating voltage	[V]	< 250 AC / < 300 DC
Protection class		II
Max. current load total	[A]	4; (...40 °C)
Operating conditions		
Ambient temperature	[°C]	-25...90
Storage temperature	[°C]	-25...55
Storage humidity	[%]	10...100
Other climatic conditions for storage according to stated class		1K22/ DIN 60721-3-1
Protection		IP 65; IP 67; IP 68; IP 69K
Mechanical data		
Weight	[g]	41.1
Moulded-body material		PA 6.6
Material nut		brass, nickel-plated
Sealing material		FKM
Remarks		
Pack quantity		1 pcs.

EVC810

Wirable socket

SDOGH040MSSFKPG

Electrical connection

screw terminals: 0.25...1 mm²; Cable sheath: Ø 3.5...6 mm; AWG 23...17

Electrical connection - socket

Connector: 1 x M12, straight; coding: A; Moulded body: PA 6.6, orange; Locking: brass, nickel-plated; Sealing: FKM; Contacts: gold-plated; Tightening torque: 0.6...1.2 Nm; Take into account the maximum value of the counterpart!

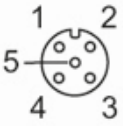

Connection

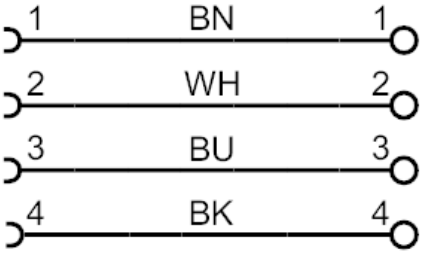

	Core colours :
BN =	brown
WH =	white
BU =	blue
BK =	black
	colours to DIN EN 60947-5-2